Migrations to UNE-P
Alabama

BST
GA Dkt 17749-U
ATT's 1st Interrogatories Item No. 32

Month	LSR Submissions		Mech LSR Submissions										
	Total Manual LSR's	Total Mech LSR's	Total Manual Fallout	Auto Clarification	Pending Supps	Validated LSR's	Total System Fallout	BST Caused Fallout	CLEC Caused Fallout	Issued SO's	Percent Fully Mech	Percent Fallout Returned to CLEC	Percent BST Manually Creates
Jul-02	38	8121	545	1138	20	6418	1377	1099	278	5041	75.0%	20.2%	25.0%
Aug-02	89	19393	662	2638	30	16063	1835	1522	313	14228	86.2%	17.1%	13.8%
Sep-02	91	9637	567	1473	21	7576	738	604	134	6838	84.4%	18.2%	15.6%
Oct-02	123	11836	506	1786	12	9532	688	563	125	8844	88.1%	18.2%	11.9%
Nov-02	136	11434	388	1680	25	9341	540	432	108	8801	90.2%	20.0%	9.8%
Dec-02	114	9048	298	1450	17	7283	634	490	144	6649	88.1%	22.7%	11.9%
Jan-03	300	11462	379	1508	22	9553	1103	914	189	8450	84.1%	17.1%	15.9%
Feb-03	86	13149	547	1839	25	10738	669	530	139	10069	89.6%	20.8%	10.4%
Mar-03	130	14509	672	2010	27	11800	634	500	134	11166	89.6%	21.1%	10.4%
Apr-03	130	17925	789	2552	25	14559	1035	827	208	13524	88.6%	20.1%	11.4%
May-03	70	15675	718	2290	28	12639	573	341	232	12066	91.4%	40.5%	8.6%
Jun-03	102	17351	1163	2370	25	13793	1303	550	753	12490	87.3%	57.8%	12.7%
Jul-03	147	24206	1344	2516	21	20325	2142	804	1338	18183	88.8%	62.5%	11.2%
Aug-03	121	15747	878	2010	13	12846	1171	288	883	11675	90.1%	75.4%	9.9%

Notes:
(1) Percent Fully Mech = Issues SO's / (Total Manual LSR's + (Total Mech LSR's - Auto Clarifications - Pending Supps - CLEC Caused Fallout))
(2) Percent Fallout Returned to CLEC = CLEC Caused Fallout / Total System Fallout
This does not give any consideration to manual clarifications processed from LSR's from the Total Manual Fallout category.
(3) Percent BST Manually Creates = (Total Manual LSR's + Total Manual Fallout + BST Caused Fallout) / (Total Manual LSR's + (Total Mech LSR's - Auto Clarifications - Pending Supps - CLEC Caused Fallout))

Migrations to UNE-L
Alabama

BST
GA Dkt 17749-U
ATT's 1st Interrogatories Item No. 28

Month	LSR Submissions		Mech LSR Submissions										
	Total Manual LSR's	Total Mech LSR's	Total Manual Fallout	Auto Clarification	Pending Supps	Validated LSR's	Total System Fallout	BST Caused Fallout	CLEC Caused Fallout	Issued SO's	Percent Fully Mech	Percent Fallout Returned to CLEC	Percent BST Manually Creates
Jul-02	6	10	6	0	0	4	3	0	3	1	7.7%	100.0%	92.3%
Aug-02	12	3	1	0	0	2	2	2	0	0	0.0%	0.0%	100.0%
Sep-02	6	8	0	0	0	8	7	5	2	1	8.3%	28.6%	91.7%
Oct-02	2	1	0	0	0	1	0	0	0	1	33.3%	#DIV/0!	66.7%
Nov-02	0	2	0	1	0	1	0	0	0	1	100.0%	#DIV/0!	0.0%
Dec-02	5	25	3	0	0	22	16	12	4	6	23.1%	25.0%	76.9%
Jan-03	4	109	8	1	0	100	21	12	9	79	76.7%	42.9%	23.3%
Feb-03	2	27	4	0	0	23	1	1	0	22	75.9%	0.0%	24.1%
Mar-03	0	4	0	0	0	4	2	0	2	2	100.0%	100.0%	0.0%
Apr-03	0	7	1	1	0	5	4	3	1	1	20.0%	25.0%	80.0%
May-03	0	5	0	0	0	5	3	3	0	2	40.0%	0.0%	60.0%
Jun-03	0	9	5	2	0	2	0	0	0	2	28.6%	#DIV/0!	71.4%
Jul-03	0	8	7	0	0	1	0	0	0	1	12.5%	#DIV/0!	87.5%
Aug-03	0	1	0	0	0	1	0	0	0	1	100.0%	#DIV/0!	0.0%

Notes:
(1) Percent Fully Mech = Issues SO's / (Total Manual LSR's + (Total Mech LSR's - Auto Clarifications - Pending Supps - CLEC Caused Fallout))
(2) Percent Fallout Returned to CLEC = CLEC Caused Fallout / Total System Fallout
This does not give any consideration to manual clarifications processed from LSR's from the Total Manual Fallout category.
(3) Percent BST Manually Creates = (Total Manual LSR's + Total Manual Fallout + BST Caused Fallout) / (Total Manual LSR's + (Total Mech LSR's - Auto Clarifications - Pending Supps - CLEC Caused Fallout))

Coordinated Hot Cut Process

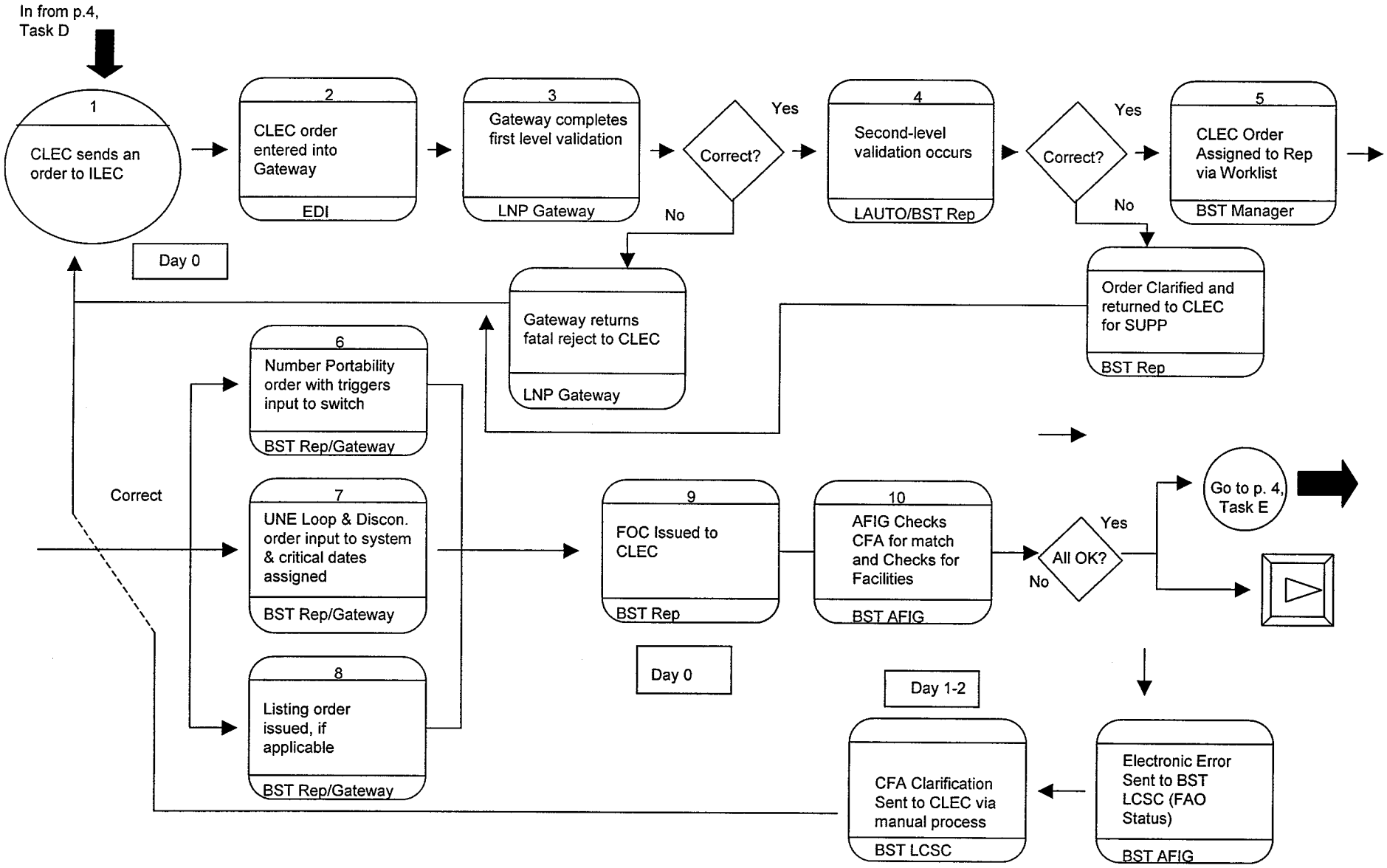

Coordinated Hot Cut Process

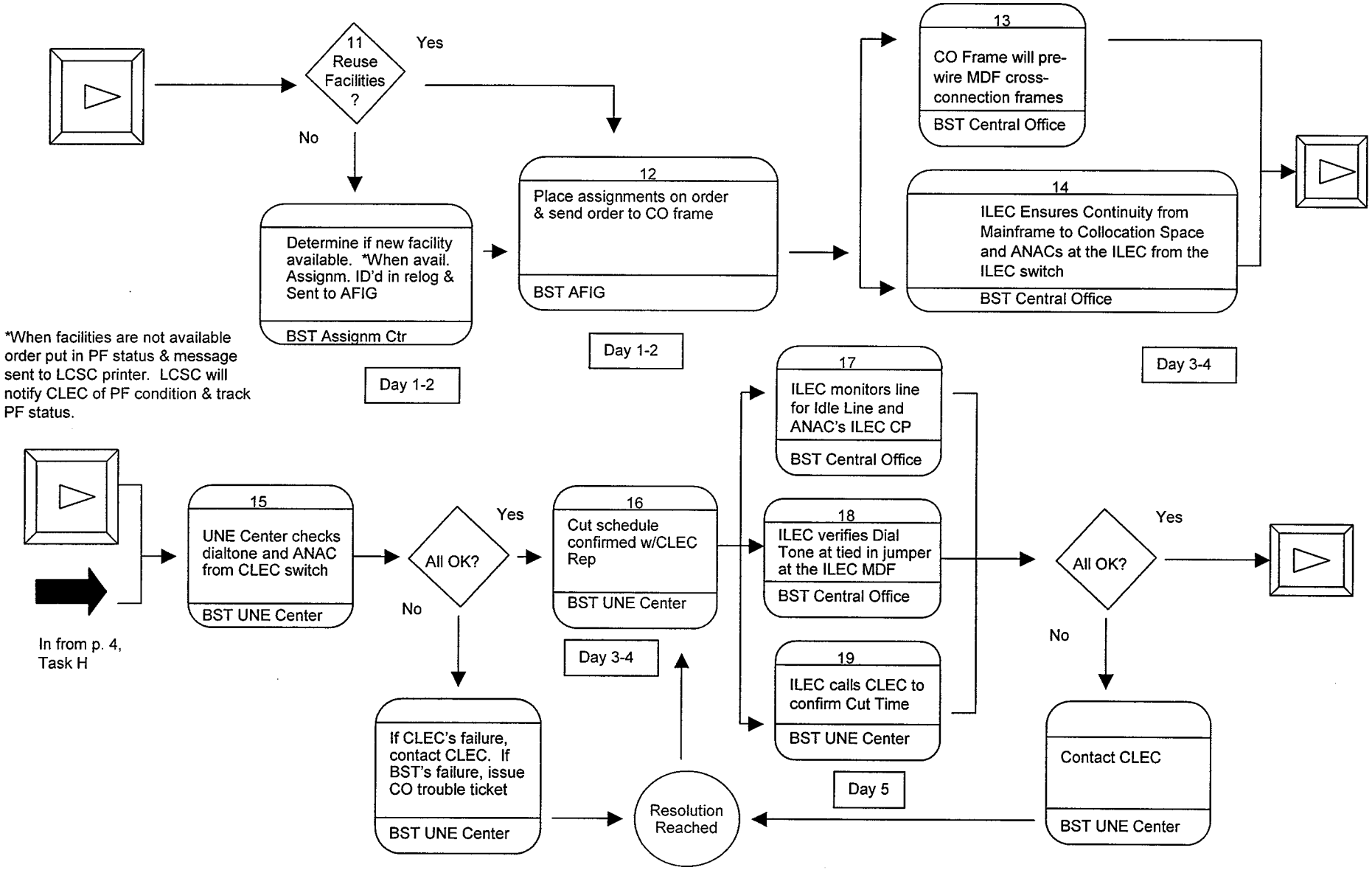

Coordinated Hot Cut Process

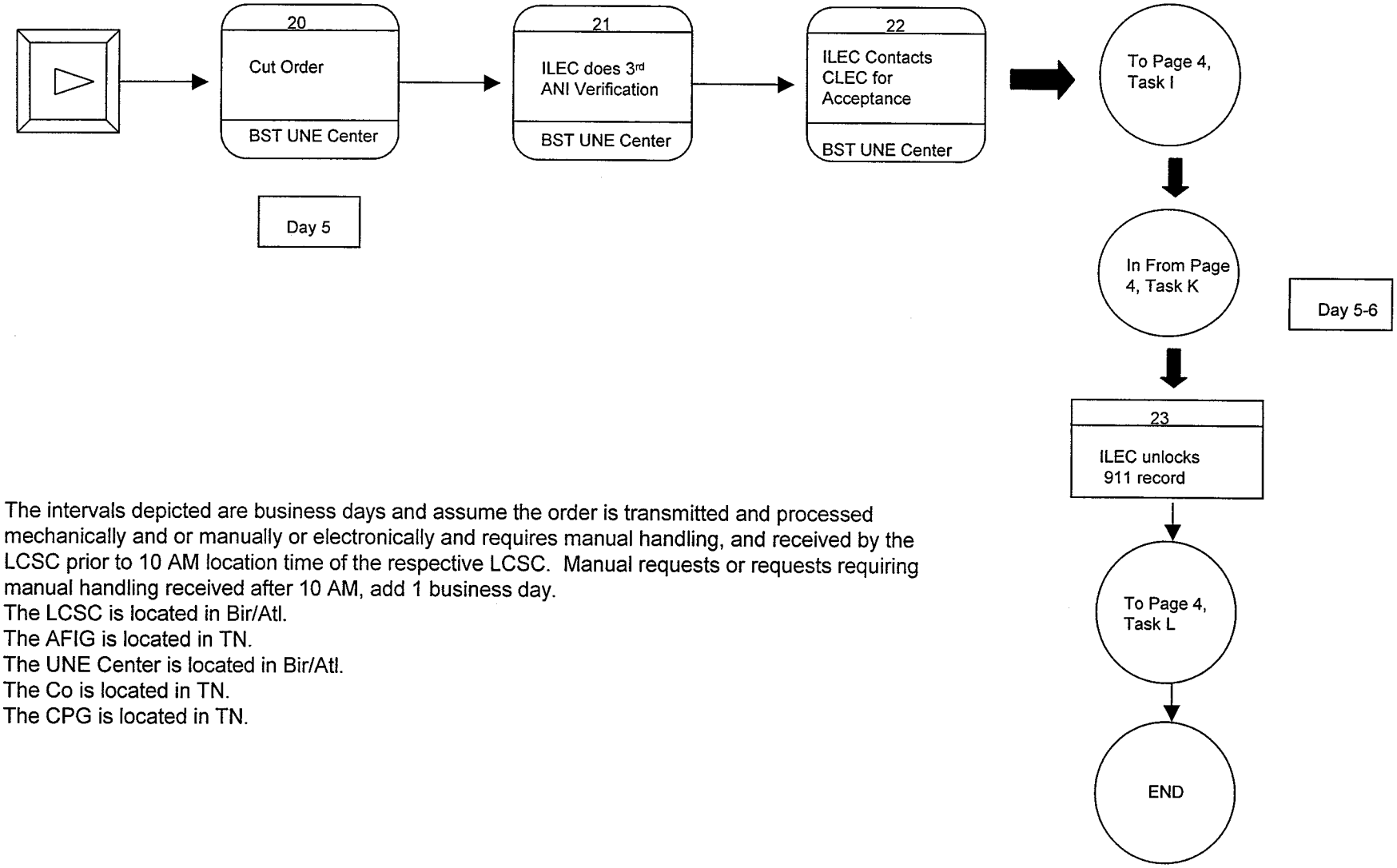

The intervals depicted are business days and assume the order is transmitted and processed mechanically and or manually or electronically and requires manual handling, and received by the LCSC prior to 10 AM location time of the respective LCSC. Manual requests or requests requiring manual handling received after 10 AM, add 1 business day.
The LCSC is located in Bir/Atl.
The AFIG is located in TN.
The UNE Center is located in Bir/Atl.
The Co is located in TN.
The CPG is located in TN.

Coordinated Hot Cut Process
CLEC Hot Cut Incremental Activities

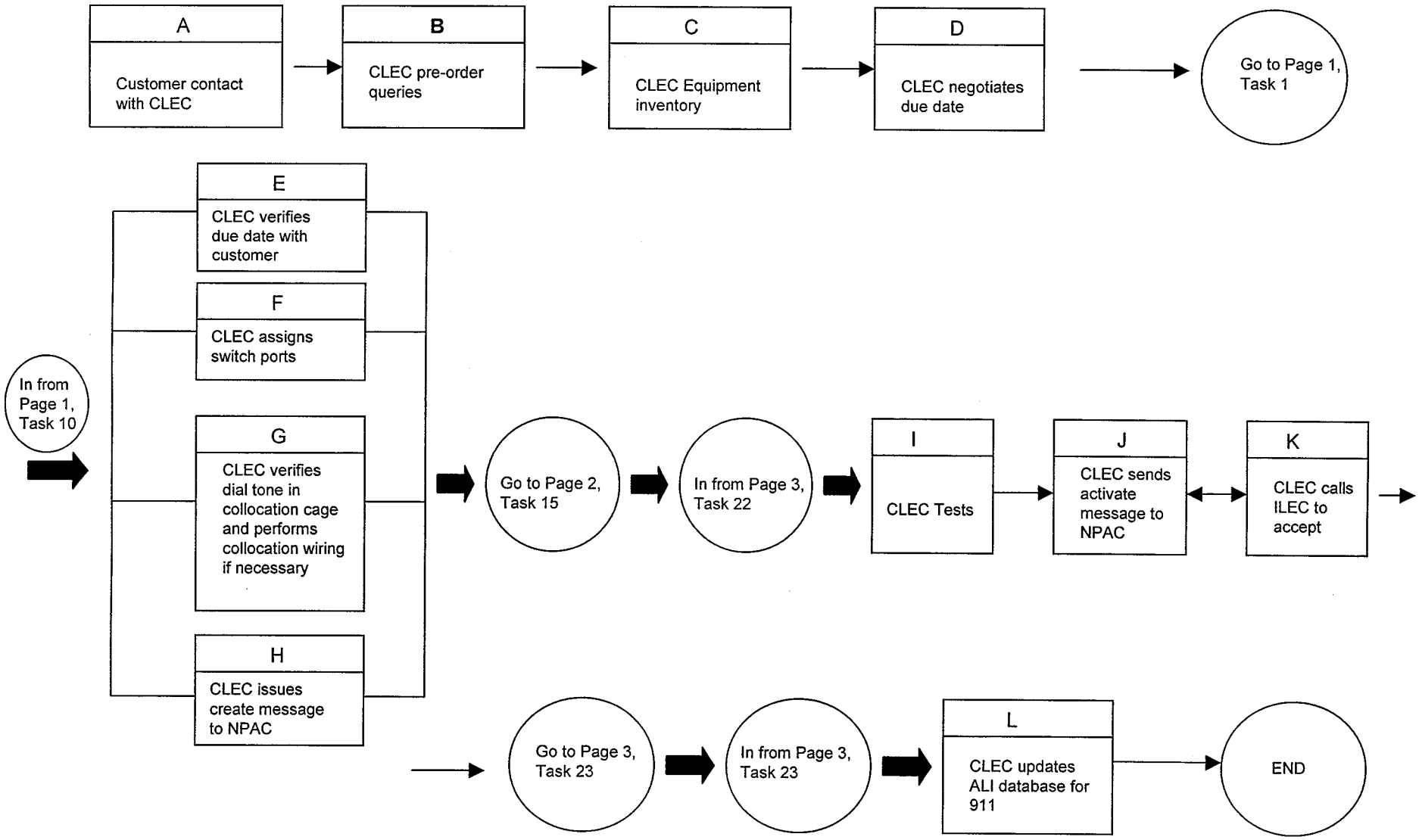

Docket 29054-Phase II
Direct Testimony of Mark Van De Water
January 20, 2004
Exhibit: MDV-4

VIDEO ATTACHED

August 30, 2002

VIA FACSIMILE AND MAIL

Jim Schenk
BellSouth Telecommunications, Inc.
600 North 19th Street
8th Floor
Birmingham, Alabama 35203

RE: Coordinated Bulk Hot Cut Process

Dear Jim:

The purpose of this letter is to request BellSouth's adoption of a new process in our companies' efforts to address the insufficiency in today's loop-by-loop hot cut process. As we have discussed on several occasions, in spite of its commitment to serving customers on our own local network, AT&T has found it increasingly difficult to use unbundled loops to provide service to our small business local customers. While there are many factors, the inability to complete individual hot cuts in a commercially reasonable manner has proven to be a significant initial hurdle. In fact, in spite of the development of detailed individual hot cut processes to avoid outages, our experience has shown that current methods are unreliable, uneconomical and incapable of sustaining commercial volumes in a competitive environment.

However, AT&T has achieved a small measure of success in New York where, using an outside contractor, AT&T has been able to convert thousands of customers to AT&T's network using a bulk hot cut process. We wish to implement a similar process in the BellSouth territory. This process allows for the project-based conversion of a number of AT&T customers within a single local serving office ("LSO") and takes advantage of the efficiency of converting a number of lines, after regular business hours, with real time coordination between AT&T and BellSouth. Contrary to the current individual hot cut processes, the bulk conversion process can eliminate many of today's problems with customer outages and the lack of commercial volumes, while at the same time significantly lowering the cost to both BellSouth and AT&T.

Based on the New York experience, it is clear that it would be worthwhile to develop a process which would allow AT&T to migrate those customers currently served on the

UNE platform to AT&T's own network using unbundled loops. More importantly, because a bulk conversion process will be less costly for BellSouth to implement, we would anticipate substantial reductions on UNE-L hot cut charges associated with this process. Therefore, I am now asking for your commitment to work collaboratively with AT&T to fully document and implement the necessary procedures for such bulk conversions. AT&T has identified a number of factors that must be addressed in order to ensure a successful process. Although probably not a comprehensive list, these factors include:

- The ability to convert between 100 – 250 lines within a single LSO at one time;
- The development of a streamlined ordering process to avoid unnecessary individual orders and both the work and costs associated with them;
- A project managed focus at both AT&T and the BellSouth;
- BellSouth's conversion readiness, including dial-tone/ANI testing, loop qualification testing and pre-wiring in advance of the conversion;
- Dedicated personnel at BellSouth for the duration of the conversion process, including personnel able to resolve CFA discrepancies identified during the bulk conversion;
- Commitment of immediate service restoration in the event of a service outage during the conversion process;
- The development of appropriate measurements and tracking to ensure the quality of the process, and if necessary, to further improve the process;
- Substantially reduced prices for UNE-L hot cuts to take into account reduced costs for BellSouth.

Additional requirements, which, we believe, BellSouth already delivers via COSMOS and LENS, are the electronic access to BellSouth's CFA inventory and the ability to identify spare and utilized facilities.

In order to most efficiently develop and test a bulk hot cut process, I suggest that each company designate a representative to lead our implementation teams with this effort. I will lead the AT&T team and ask that you designate the appropriate BellSouth team leader as soon as possible. Given the importance of this process to any attempt by AT&T to use unbundled loops to serve our customers, I ask that negotiations on the process begin no later than September 16, 2002.

Sincerely,

cc: Greg Terry

UNE-Port/Loop Combination (UNE-P) to UNE-Loop (UNE-L) Bulk Migration

CLEC Information Package

Version 1

Docket 29054-Phase II
Testimony of Mark Van De Water
January 20, 2004
Exhibit: MDV-6

Table of Contents

1. INTRODUCTION & SCOPE 3

2. SERVICE DESCRIPTION 4

2.1 UNE-P 4
2.2 UNE-L 4

3. REQUIREMENTS 5

4. OPTIONS 6

5. BULK MIGRATION SUBMISSION/FLOW PROCESS 7

6. BELLSOUTH UNE-P TO UNE-L BULK MIGRATION PROJECT NOTIFICATION PROCESS 8

7. UNE-P USOCS 9

8. UNE-L USOCS 9

9. INTERVALS 10

9.1 BELLSOUTH UNE-P TO UNE-L BULK MIGRATION PROJECT NOTIFICATION INTERVAL 10
9.2 BULK REQUEST SERVICE ORDER INTERVALS 10
9.3 EXAMPLE OF INTERVALS 10

10. ACRONYMS 11

UNE-P to UNE-L Bulk Migration

1. Introduction & Scope

This Product Information Package is intended to provide CLECs general ordering information specific to the **UNE-P** to **UNE-L** Bulk Migration process described herein.

The information contained in this document is subject to change. BellSouth will provide notification of changes to the document through the CLEC Notification Process.

Please contact your BellSouth Local Support Manager if you have any questions about the information contained herein.

2. Service Description

The Unbundled Network Element – Port/Loop Combination (UNE-P) to Unbundled Network Element – Loop (UNE-L) Bulk Migration process may be used by a CLEC when migrating existing multiple non-complex UNE-P Services to a UNE-L offering.

All Bulk Migration orders will be project managed by a BellSouth Project Manager. Initially, the CLEC will submit required information to a BellSouth Project Manager who after reviewing the bulk migration work effort with the field organizations will provide due dates back to the CLEC. Once the CLEC receives the due date information from the BellSouth Project Manager, the CLEC will electronically submit a Bulk Request for service order processing and provisioning. This allows migration of multiple UNE-P end-users to a UNE-L offering without submitting individual Local Service Requests.

UNE-P and UNE-L are defined below:

2.1 UNE-P

UNE-P is a UNE Port/Loop Switched Combination that combines a UNE local switch port and UNE loop to create an end-user-to-end-user transmission path and provides local exchange service. The CLEC may also choose to use the vertical services that are available through the features and functions of the local switch.

2.2 UNE-L

UNE-L is defined as the local loop network element that is a transmission facility between the main distribution frame (MDF) in BellSouth's central office and the point of demarcation at an end-user's premises. This facility will allow for the transmission of the CLEC's telecommunications services when connected to the CLEC's switch equipment. The local loop will require cross-connects for connection to the CLEC's collocation equipment. BellSouth does not provide telecommunications services with the UNE-L.

UNE-P to UNE-L Bulk Migration

3. Requirements

Major requirements for UNE-P to UNE-L Bulk Migration process are listed below. For complete requirements, refer to the **UNE to UNE Bulk Migration** section of the **Local Ordering Handbook** *(formerly named "BellSouth Business Rules for Local Ordering")*

- Bulk Migration is available for migrating existing **non-complex** Port/Loop Combination services to Unbundled Loops with Local Number Portability (LNP).
- A UNE Loop will be provided for each ported telephone number formerly associated with the UNE-P Service.
- Complex UNE-P accounts are prohibited on Bulk Requests. Examples of Complex UNE-P are 2 Wire ISDN/BRI Digital Loop & Port UNE Combination, 4 Wire ISDN/PRI Digital Loop & Port UNE Combination, UNE-P Centrex, Digital Direct Integration Termination Service (DDITS), etc.
- The UNE-Ps that can be migrated are listed in the **UNE-P USOC** section.
- UNE-Ps can be migrated to the UNE-Ls listed in the **UNE-L USOC** section. These UNE-L types must be in the CLEC's Interconnection Agreement.
- Bulk Requests that require a change in existing loop facilities to a type of facility that is not available, resulting in a Pending Facility (PF) status, must be cancelled by the CLEC and removed from the Bulk Request.
- All Existing Account Telephone Numbers (EATNs) on the Bulk Request must use the existing Regional Street Address Guide (RSAG) valid end-user address.
- All EATNs must be served from the same BellSouth Serving Wire Center (SWC).
- All UNE-Ps on a Bulk Request must be migrated to a single UNE-L type.
- No end-user moves or changes of address will be allowed on the Bulk Request.
- Non-Recurring rates for the specific loop type being requested will be charged.
- Service order charges for mechanized orders (SOMEC) will be charged based on the current rules for individual Local Service Requests (LSRs) created per EATN of a Bulk Request.
- A BellSouth Project Manager (PM) will project manage the Bulk Request.
- CLEC must submit a **BellSouth UNE-P to UNE-L Bulk Migration Project Notification**, herein known as **Project Notification,** to the BellSouth PM prior to the CLEC's placing the mechanized Bulk Request.
- CLEC may specify Desired Due Dates (DDD) for each EATN. However, the BellSouth PM will negotiate firm Due Dates for the Bulk Request.
- A minimum of two (2) EATNs and up to a maximum of ninety-nine (99) EATNs can be placed on a single Bulk Request.
- A maximum of twenty-five (25) end-user telephone numbers per EATN can be placed on a Bulk Request.
- No additional EATNs or end-user telephone numbers may be added to the ***BellSouth UNE-P to UNE-L Bulk Migration Project Notification*** form once it has been submitted to the BellSouth PM.

UNE-P to UNE-L Bulk Migration

Requirements (continued)

- Order Coordination-Time Specific option is not applicable for a Bulk Request.
- UNE-Ls that require a Service Inquiry and/or Unbundled Loop Modification are excluded from the Bulk Request process.
- A Reservation Identification (RESID) (also referred to as a Facility Reservation Number (FRN)) is required on the Bulk Request for Unbundled ADSL Compatible Loops, HDSL Compatible Loops and Unbundled Copper Loop - Designed (UCL-D). Refer to the **Unbundled ADSL and Unbundled HDSL Compatible Loop, UCL-Designed CLEC Information Packages** and **Loop Make-Up CLEC Information Package** for RESID/FRN requirements.
- When a Mechanized Loop Make Up with Facility Reservation Number (FRN) is requested, the CLEC must submit the Bulk Request with the FRN to BellSouth within 24 hours of receiving FRN.
- Firm Order Confirmation (FOC) will be sent on individual LSRs generated from the Bulk Request.
- Upon receipt of a Reject, CLEC must re-submit a corrected Bulk Request or submit a cancellation of the Bulk Request.

4. Options

- Order Coordination (OC) /Coordinated Hot Cut (CHC) is included on the UVL-SL2, 2 Wire ADSL and 2/4 Wire HDSL Loops. OC is available when the loop is provisioned over an existing circuit that is currently providing service to the end-user.
- OC is available as a chargeable option for conversions to UVL-SL1, UCL-ND and UCL-Designed Loops. OC must be requested at the EATN level on the Project Notification form. An OC charge will be applied to each loop on the EATN for which OC has been requested. OC will be indicated on Project Notification and will not be required on the Bulk Request LSR at this time.
- The CLEC may qualify the existing UNE-P facilities for the UNE-L types requested. For example, through Loop Make-Up (LMU), the CLEC can verify that a UNE-P facility being migrated is not on an Integrated Digital Loop Carrier (IDLC). When the existing UNE-P facility is on IDLC, the CLEC can reserve alternate compatible facilities if available.

5. Bulk Migration Submission/Flow Process

The Bulk Request Submission Process will consist of two main work activities. The CLEC will first submit a Project Notification. Once the Project Notification has been processed and returned to the CLEC, the CLEC will then prepare and input the mechanized Bulk Request. The Bulk Request must be submitted according to the guidelines contained in the **Local Ordering Handbook.** Below are the steps in the process :

Step #	Action
1	PM receives Project Notification form from CLEC and negotiates/assigns Bulk Order Package Identifier (BOPI) and validates information (i.e., USOCs, Same Wire Center, etc.).
2	If pertinent information is missing on the Project Notification package, the form is returned to CLEC along with a reason(s) for return. PM receives corrected Project Notification from the CLEC and continues the negotiation process.
3	PM contacts BellSouth's Network organization and negotiates Due Date (DD) for all related Purchase Order Numbers (PONs) in the Bulk package and returns Bulk Notification Form including negotiated DD to the CLEC.
4	Upon receipt of the Bulk Notification Form that includes negotiated DD from PM, CLEC submits Bulk Request package with negotiated dates for each EATN/PON via electronic ordering interface.
5	If the CLEC wants to supplement (SUP) (01,02,03) an individual PON, the request must be sent through the same electronic ordering system as the original Bulk Request.
6	At this point, the Bulk Request package will be processed for 1st level validation and any rejects will be mechanically generated to the CLEC.
7	The electronic ordering systems will accept the Bulk Request package, break the individual PONs into separate LSRs and populate the remaining required LSR fields from Operation Support System (OSS) systems prior to sending the individual LSRs downstream to the Local Number Portability (LNP) Gateway.
8	The LNP Gateway will perform 2nd level validations and provide any fallouts, per "business as usual" processes. The Local Carrier Service Center (LCSC) will handle all fallouts as normal. Any of the individual PONs that must be clarified will be sent back to the CLEC, business as usual.
9	After LNP Gateway issues the service orders, the LCSC will handle all manual service order fallouts as normal. The BellSouth Service Representative will send any PF and Missed Appointments (MA) to the CLEC via a jeopardy notice.
10	LNP Gateway will send an FOC on each individual PON associated with the Bulk Request package, to the CLEC.
11	The Project Manager will monitor PON, Service Order and Porting Statuses associated with the Bulk Request package. BellSouth's Service Representative and Project Manager will monitor the LNP gateway for the "Number Ported" messages and the Service Representative will handle manual port out order processing if required.

6. BellSouth UNE-P to UNE-L Bulk Migration Project Notification Process

Following is the Project Notification process:

- Complete the **BellSouth UNE-P to UNE-L Bulk Migration Project Notification** form according to the instructions.
- Electronically submit the ***Project Notification*** to the email address of the CLEC's assigned BellSouth Project Manager (PM). For help with identifying a Project Manager, contact your BellSouth Customer Support Manager.
- The BellSouth PM will review the information submitted by the CLEC and will assign a Bulk Order Package Identifier (BOPI) that the CLEC will later use on the electronic Bulk Request.
- The BellSouth PM will coordinate with BellSouth's field forces to schedule the migration Due Dates.
- Once the review with the field forces is complete, the BellSouth PM will include the Due Dates on the ***Project Notification*** and return it to the CLEC.
- No additional EATNs or end-user telephone numbers may be added to the ***Project Notification*** form once it has been submitted to the BellSouth PM.

7. UNE-P USOCs

The UNE-P Services that can be migrated to UNE-L are represented by the Port USOCs listed in the table below:

Port USOC	Unbundled Port/Loop Combination Element	Description of Combinations using an Unbundled Exchange Port (UEP):
UEPBX	UEPLX	UEP, Business, 2 Wire Analog Business Line Port, UNE=P Basic Class of Service
UEPRX	UEPLX	UEP, Residence, 2 Wire Analog Residence Line Pot, UNE-P Basic Class of Service
UEPCO	UEPLX	UEP, Coin Basic Class of Service UNE-P
UEPBV	UEPLX	UEP, Remote Call Forwarding, Business Basic Class of Service
UEPVR	UEPLX	UEP, Remote Call Forwarding, Residence Basic Class of Service

8. UNE-L USOCs

Below are the UNE-L types and associated USOCs to which the UNE-Ps can be migrated:

Loop USOC	Description
UEAL2	2 Wire Unbundled Voice Loop – SL1
UEAL2, UEAR2	2 Wire Unbundled Voice Loop – SL2
UCLPW	2 Wire Unbundled Copper Loop/Short– Designed without manual Service Inquiry
UCL2W	2 Wire Unbundled Copper Loop/Long - Designed without manual Service Inquiry
UCL4W	4 Wire Unbundled Copper Loop/Short – Designed without manual Service Inquiry
UCL4O	4 wire Unbundled Copper Loop/Long – Designed without manual Service Inquiry
UEQ2X	2 Wire Unbundled Copper Loop – Non-Designed
UAL2W	2 Wire Unbundled ADSL Loop without manual Service Inquiry
UHL2W	2 Wire Unbundled HDSL Loop without manual Service Inquiry
UHL4W	4 Wire Unbundled HDSL Loop without manual Service Inquiry

9. Intervals

9.1 BellSouth UNE-P to UNE-L Bulk Migration Project Notification Interval

- The "*PM Targeted Response Interval*" column in the table below represents the targeted number of business days in which the PM will respond back to the CLEC.
- CLEC must submit the **Project Notification** in advance of the earliest CLEC's requested Desired Due Date (DDD) according to the "*Minimum # of days in advance to submit Project Notification*" column in the table below. This column represents the number of days that the Project Notification must be submitted in advance of the earliest DDD.
- "*Minimum # of days*" includes the interval for the Project Manager to negotiate the Due Dates. It also allows three (3) days for the CLEC to correct, process and submit mechanized Bulk Request and it includes 14 days in order to meet the 14-business day submission requirement for the Bulk Request.
- The PM will attempt, where possible, to assign the work such that migrations occur on the requested DDD.

# of end-user Tel. Numbers	PM Targeted Response Interval	CLEC days after receipt from Proj Mgr	Bulk Request Submission Requirement	Minimum # of days in advance to submit Project Notification
Maximum of 99	7 business days	3 business days	14 business days	24 business days
100-200	10 business days	3 business days	14 business days	27 business days
201 +	To be determined	3 business days	14 business days	Contact PM

9.2 Bulk Request Service Order Intervals

- The BellSouth Project Manager will negotiate the Bulk Request due dates with BellSouth's provisioning personnel and will communicate the due date to the CLEC.
- The CLEC must submit the Bulk Request and it must be accepted by the mechanized system at least 14 business days in advance of the earliest Due Date for any end-user telephone number to be migrated.

9.3 Example of Intervals

An example of Intervals follows:

CLEC submits Project Notification with 87end-user telephone numbers on May 1, 2003:

- May 12, 2003 (7 business days) – CLEC receives Project Notification with firm Due Dates
- May 12 – May 15 (3 business days) – CLEC will prepare and submit mechanized Bulk request via the electronic interface.
- June 5, 2003 (14 business days) – the earliest PM assigned Due Date on the Project Notification returned to the CLEC.

10. Acronyms

ADSL	Asymmetrical Digital Subscriber Line
BOPI	Bulk Order Package Identifier
CHC	Coordinated Hot Cut
CLEC	Competitive Local Exchange Carrier
DDD	Desired Due Date
EATN	Existing Account Telephone Number
FOC	Firm Order Confirmation
FRN	Facility Reservation Number
HDSL	High-Bit-Rate Digital Subscriber Line
LCSC	Local Carrier Service Center
LNP	Local Number Portability
LSR	Local Service Request
MDF	Main Distribution Frame
OC	Order Coordination
OSS	Operation Support System
PM	Project Manager
PON	Purchase Order Number
RESID	Reservation Identification
RSAG	Regional Street Address Guide
SWC	Serving Wire Center
UCL-D	Unbundled Copper Loop – Designed
UCL-ND	Unbundled Copper Loop – Non-Designed
UNE-P	Unbundled Network Element-Port/Loop Combination
UNE-L	UNE Loop

Denise C. Berger
Operations AVP
Local Supp ier Management

Room 12256
1200 Peachtree Street NE
Atlanta, Georgia 30309
404 810-8644
FAX 281 664-3648
PAGER 888 858-7243 PIN 123
WIRELESS 404 915-0796
deberger@att.com

June 9, 2003

Phillip Cook
BellSouth Interconnection Services
675 West Peachtree Street
Room 34H71
Atlanta, Georgia 30375

RE: NBR GA02-M931-00 Unbundled Network Element – Platform (UNE-P) to UNE-Loop (UNE-L) Coordinated Bulk Conversion Process

Dear Phillip:

The purpose of this letter is to respond to your letter of May 30, 2003, regarding New Business Request (NBR) GA02-M931-00. Your letter stated that BellSouth, pursuant to Section 1.10 of Attachment 10 of the Interconnection Agreement, would consider the NBR cancelled if an acceptance or rejection response was not provided within five (5) days.

In its initial request on August 30, 2002, AT&T indicated that BellSouth's current hot cut methods were "unreliable, uneconomical and incapable of sustaining commercial volumes in a competitive environment" and proposed a new process, designed to address each concern. Unfortunately, BellSouth has failed to adequately address these concerns.

First, AT&T is disappointed that BellSouth did not provide adequate information regarding the impact to customers served by BellSouth's IDLC facilities. Further, AT&T requested a process, which would allow the conversion of up to 500 customers in two (2) central offices per evening. In its letter of November 20, 2002, BellSouth states,

> "BellSouth has determined that AT&T's request is technically feasible with the following caveat:
>
> - The quantity of physical facilities and telephone numbers cut per evening will vary based on the load at the time the request is submitted, and will be driven by the actual number of lines per customer."

AT&T is distressed and concerned with this stated inability of BellSouth to sustain reasonable commercial volumes. AT&T finds BellSouth's unwillingness to commit to AT&T's modest request completely unacceptable.

Finally, BellSouth's ridiculous and excessive cost of $134.32 per working telephone number, plus regular ordering charges, as well as other unspecified overtime and technician charges, prohibits commercial use. BellSouth has once again presented AT&T with a Hobson's choice: risk a devastating disruption of a customer's service or pay BellSouth a ransom to mitigate the risk.

Please consider this letter a rejection of BellSouth's preliminary analysis and firm quote.

Sincerely,

cc: Steve Huels
Jim Schenk

BELLSOUTH

BellSouth Telecommunications, Inc.
Legal Department
1025 Lenox Park Boulevard
Suite 6C01
Atlanta, GA 30319-5309

bennett.ross@bellsouth.com

Bennett L. Ross
General Counsel - Georgia

404 986 1718
Fax 404 986 1800

November 7, 2003

DELIVERED BY HAND

Mr. Reece McAlister
Executive Secretary
Georgia Public Service Commission
244 Washington Street, S.W.
Atlanta, GA 30334-5701

Re: *FCC's Triennial Review Order Regarding the Impairment of Local Switching for Mass Market Customers;* Docket No. 17749-U

Dear Mr. McAlister:

Enclosed please find an original and four (4) copies, as well as an electronic version, of BellSouth Telecommunications, Inc.'s ("BellSouth") Objections and Responses to AT&T Communications of the Southern States, LLC's First Interrogatories and First Request for Production of Documents and BellSouth's Statement of Confidentiality. I would appreciate your filing same in the above-referenced proceeding and returning the two (2) extra copies stamped "filed" in the enclosed self-addressed and stamped envelopes. By copy of this letter, the trade secret information will be provided to Ken Ellison and should be treated consistent with the Commission's trade secret rules.

I thank you for your attention to this matter.

Yours very truly,

Bennett L. Ross (PMC)

Bennett L. Ross

BLR:nvd
Enclosures

cc: Mr. Leon Bowles (via electronic mail)
Ms. Kristy Holley (via electronic mail)
Daniel S. Walsh, Esquire (via electronic mail)
Mr. Ken Ellison (proprietary information)
Parties of Record (via electronic mail)

512065/512059/510758/510767

(b) Are limits established for a particular geographic area or areas within the BellSouth territory? If so, define the geographic areas for which such limits are established and explain the basis or reasons for these area definitions.

(c) Provide a detailed explanation for why these limits are being imposed.

RESPONSE: BellSouth does not have a policy of limiting the number of bulk hot cuts or bulk hot cut projects that may occur in a single day or night.

INTERROGATORY NO. 8: Please provide the maximum number of lines that can be converted (per day) to UNE-L using:

(a) a "bulk" hot cut process per CO in BellSouth's nine-state region as a whole; and

(b) an individual hot cut process per CO in BellSouth's nine-state region.

RESPONSE:

a) BellSouth's bulk hot cut process is scalable depending on volumes.
b) BellSouth's individual hot cut process is scalable depending on volumes.

INTERROGATORY NO. 9: Please specify the geographic area and the number of simultaneous COs in a given day in which a project hot cut can be performed in COs throughout BellSouth's nine-state region.

RESPONSE: There are no specific restrictions placed on the number of simultaneous COs in a given day in which a qualified project hot cut can be performed in COs throughout BellSouth's nine-state region. Any limitations would be determined on a project-by-project basis and would depend on the size of the project(s).

INTERROGATORY NO. 10: Are there COs in which BellSouth has never performed a hot cut? If yes, please identify those COs by reference to the list provided in the response to Interrogatory No. 1.

REQUEST: Please provide the maximum number of lines that can be converted (per day) to UNE-L using:

(a) a "bulk" hot cut process per CO in BellSouth's nine-state region as a whole; and
(b) an individual hot cut process per CO in BellSouth's nine-state region.

SUPPLEMENTAL RESPONSE:

There is no set number of hot cuts that BellSouth has established for either "bulk" or individual hot cuts for any central office in any state in the BellSouth region. BellSouth's hot cut process is based on load volumes and force. BellSouth uses plan size methods to monitor staffing levels to ensure that expected hot cut volumes will be met.

LOOP CUTOVER PROCESS

Step 1: Technician gets call to begin cutover. Asks for cable pair information.

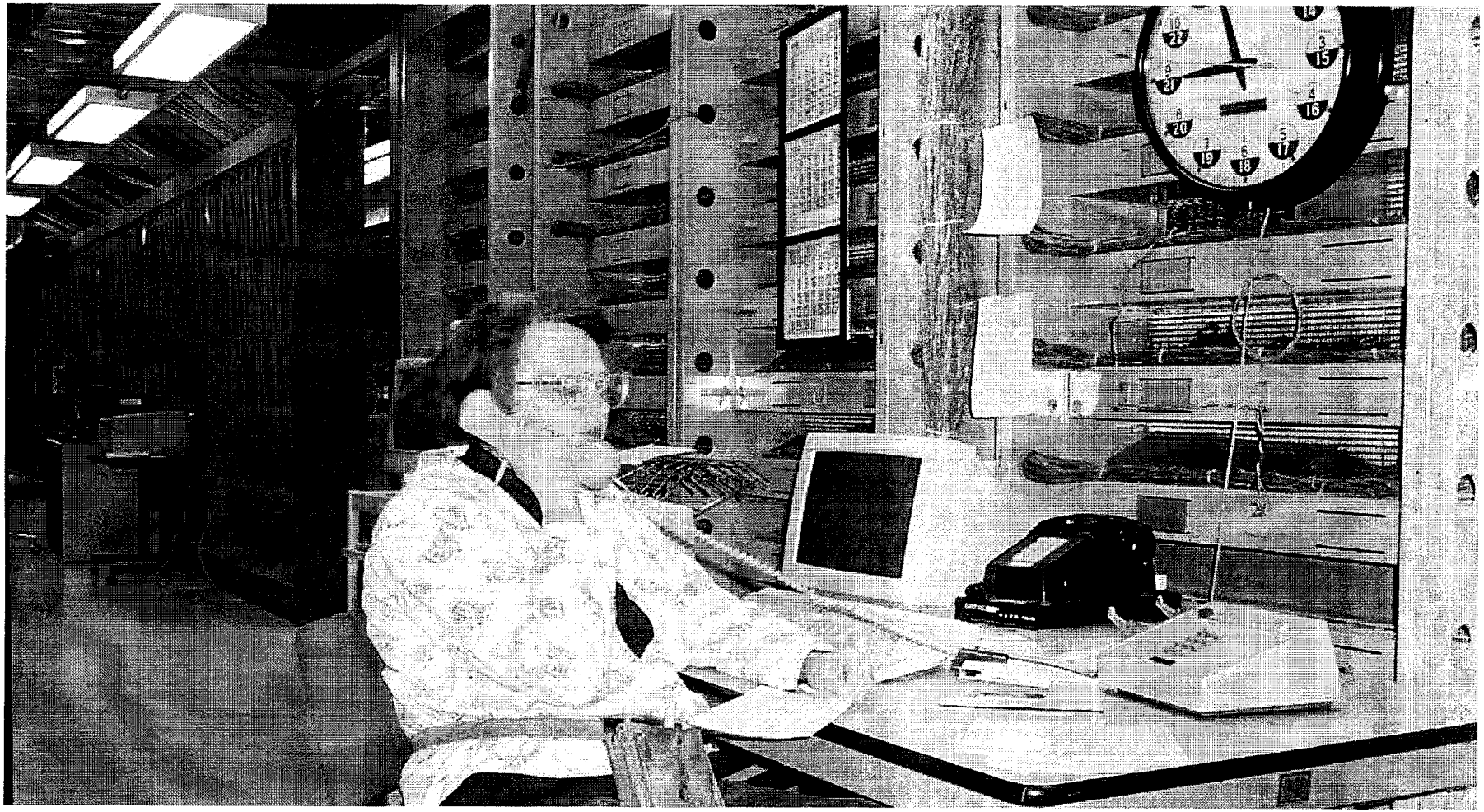

LOOP CUTOVER PROCESS

Step 2: Technician types in cable pair number to obtain order number.

LOOP CUTOVER PROCESS

Step 3: Technician retrieves copy of work order.

LOOP CUTOVER PROCESS

Step 4: Technician responds to UNE Center request to initiate overall cutover of service from BellSouth to CLEC.

LOOP CUTOVER PROCESS

Step 5: Technician conducts ANAC test to verify that correct loop is being cutover.

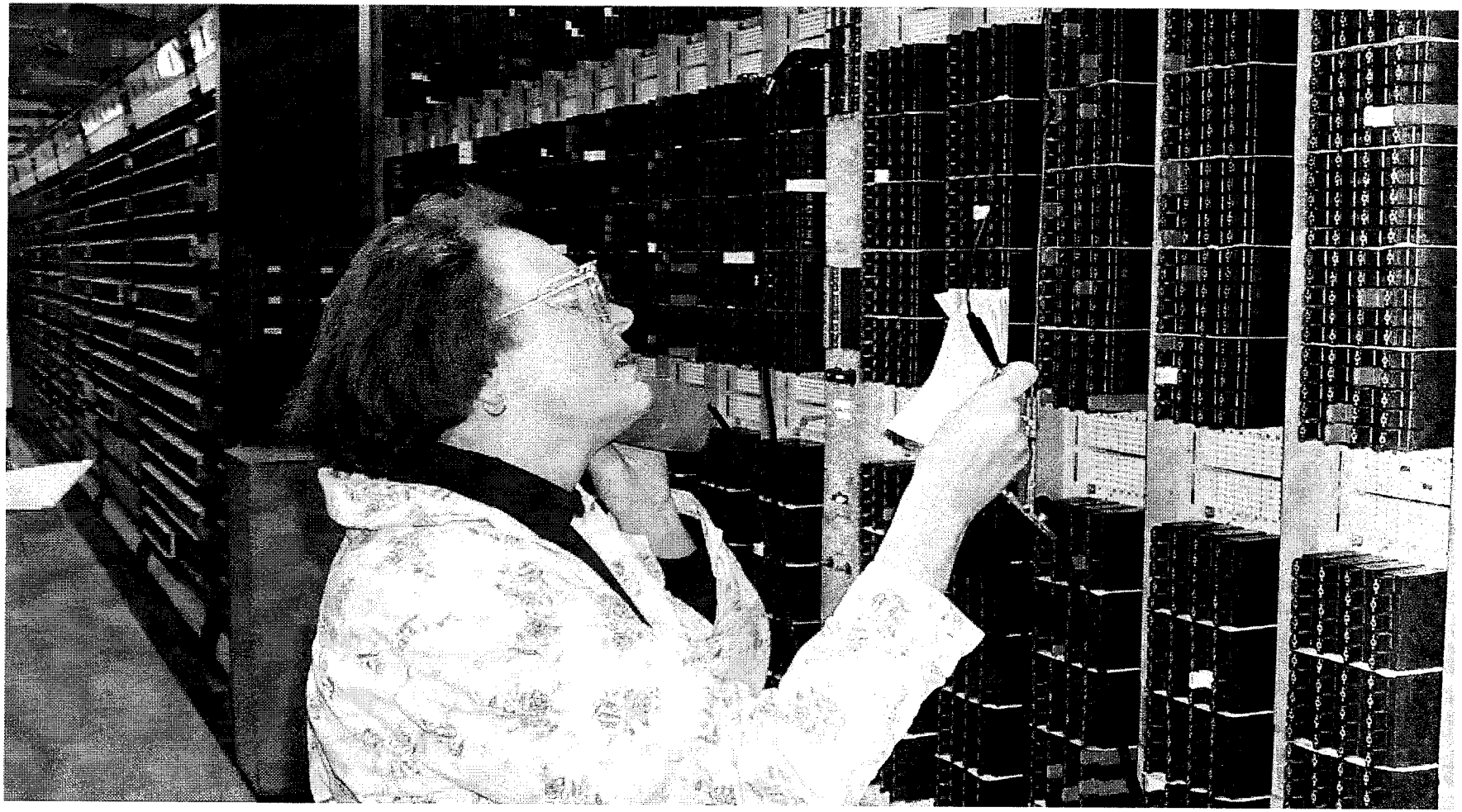

LOOP CUTOVER PROCESS

Step 6: Technician walks along Main Distributing Frame to locate both ends of jumper to be cut.

LOOP CUTOVER PROCESS

Step 7: Technician locates precise location of jumper.

LOOP CUTOVER PROCESS

Step 8: Technician locates and removes end of jumper connected to the BellSouth cable pair.

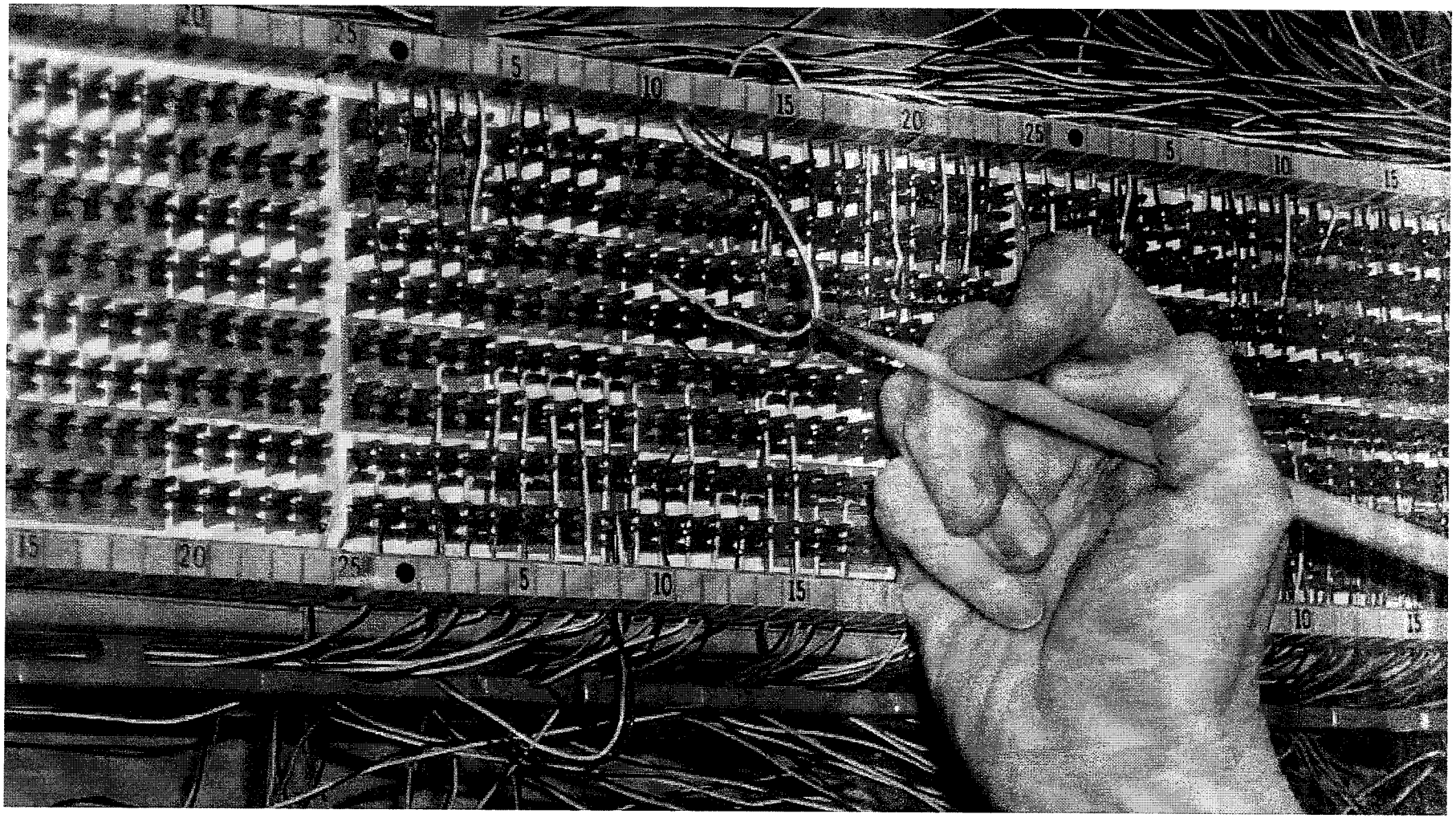

LOOP CUTOVER PROCESS

Step 9: Technician locates and removes end of jumper connected to the switching equipment.

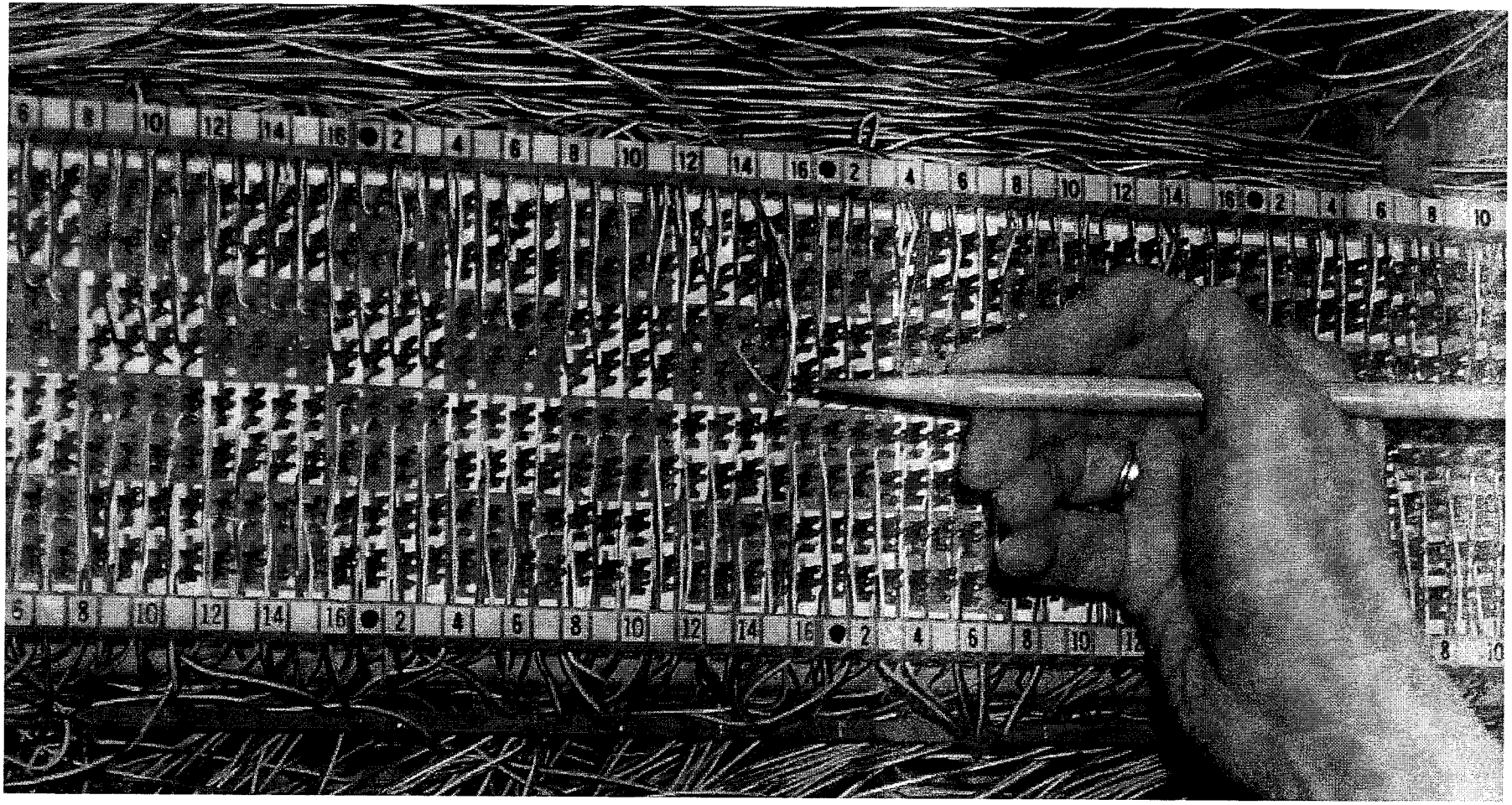

LOOP CUTOVER PROCESS

Step 10: Technician places new jumper on MDF.

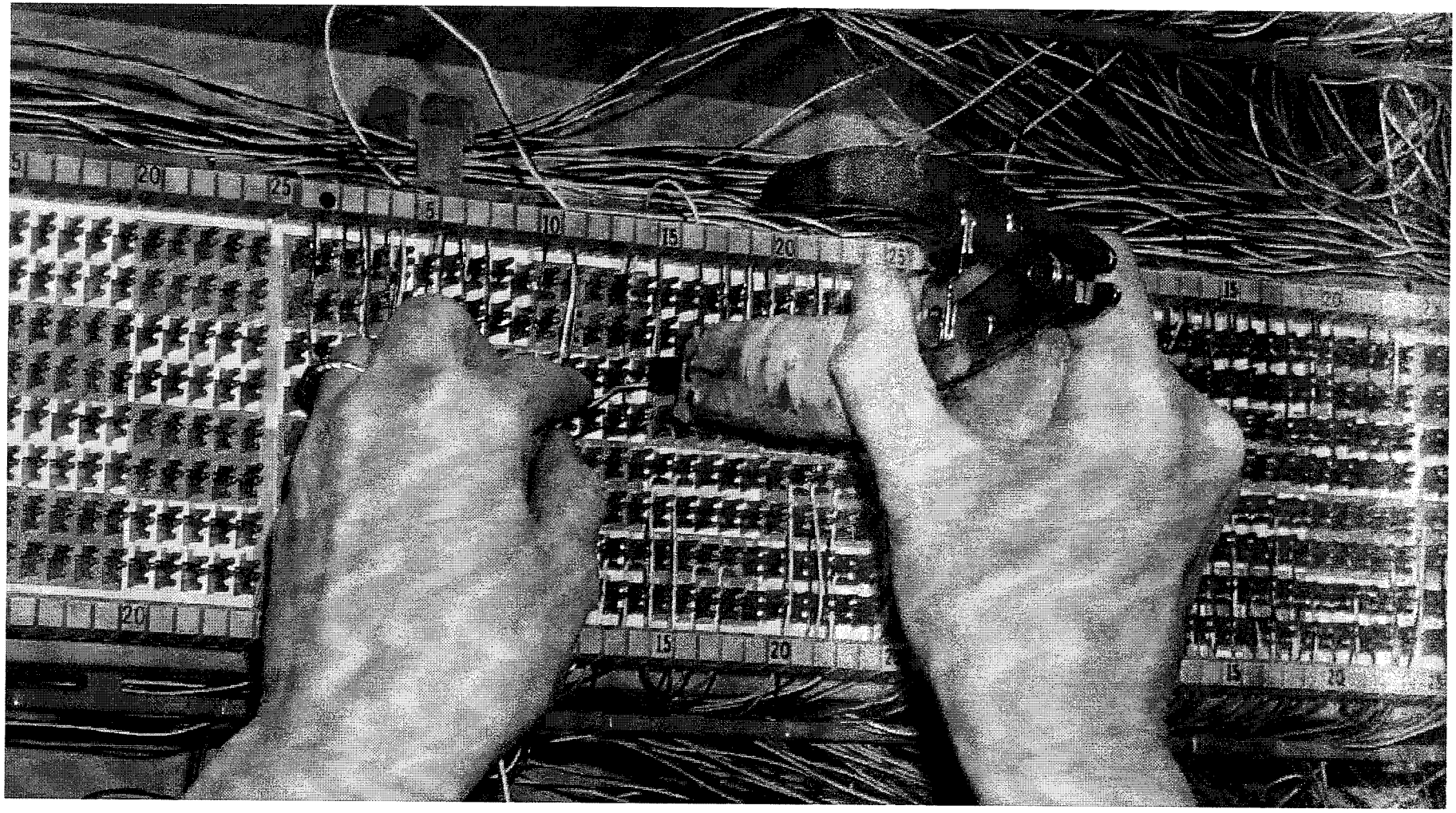

LOOP CUTOVER PROCESS

Step 11: Technician weaves wire through cable rack to reach tie cable to CLEC's collocation equipment.

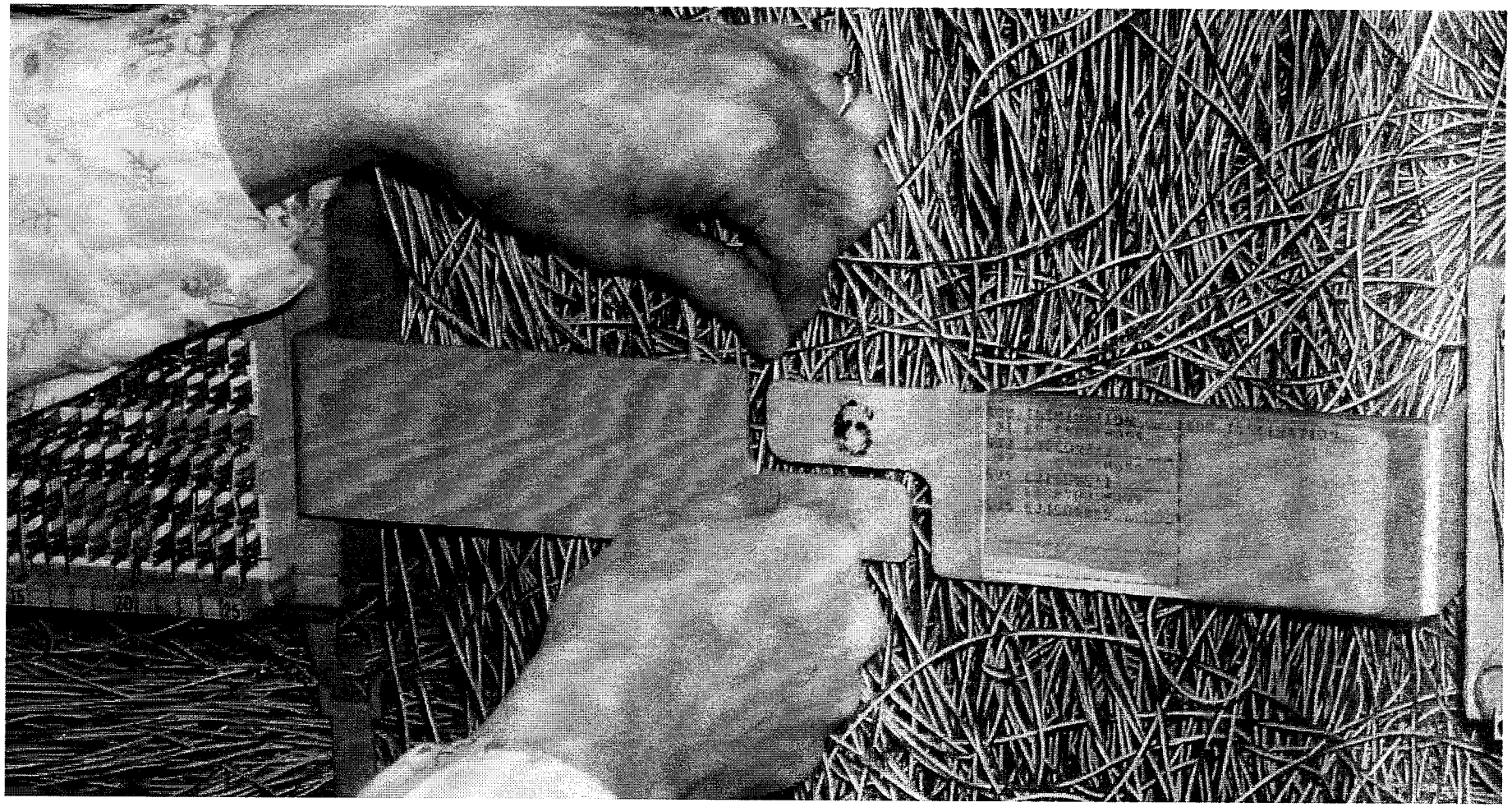

LOOP CUTOVER PROCESS

Step 12: Technician connects new jumper on frame to tie cables to CLEC equipment.

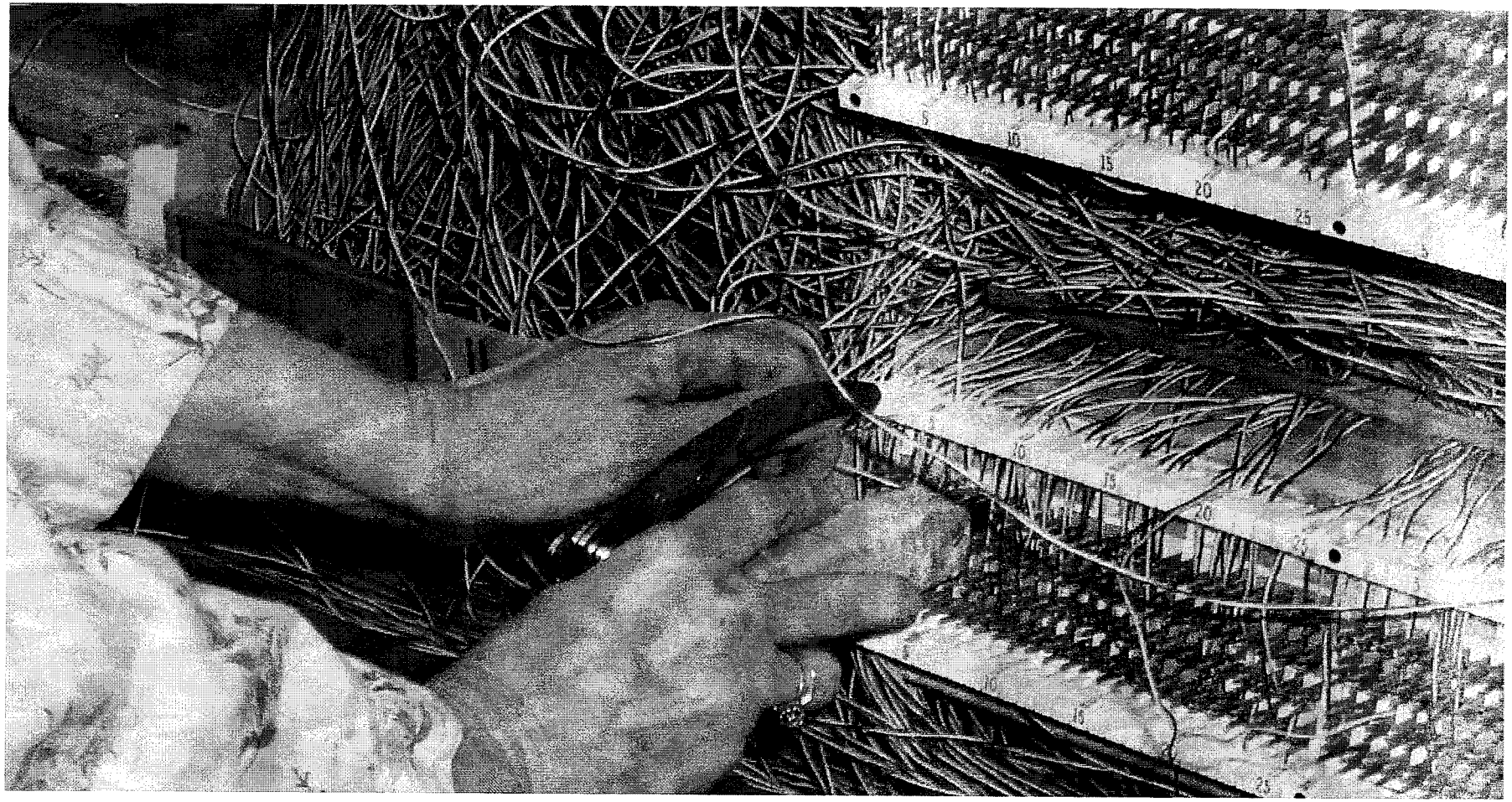

LOOP CUTOVER PROCESS

Step 13: Technician conducts ANAC test to verify that loop has been cut to correct CLEC switch port.

LOOP CUTOVER PROCESS

Step 14: Technician verifies cutover with CLEC, closes order, and notifies the UNE Center.

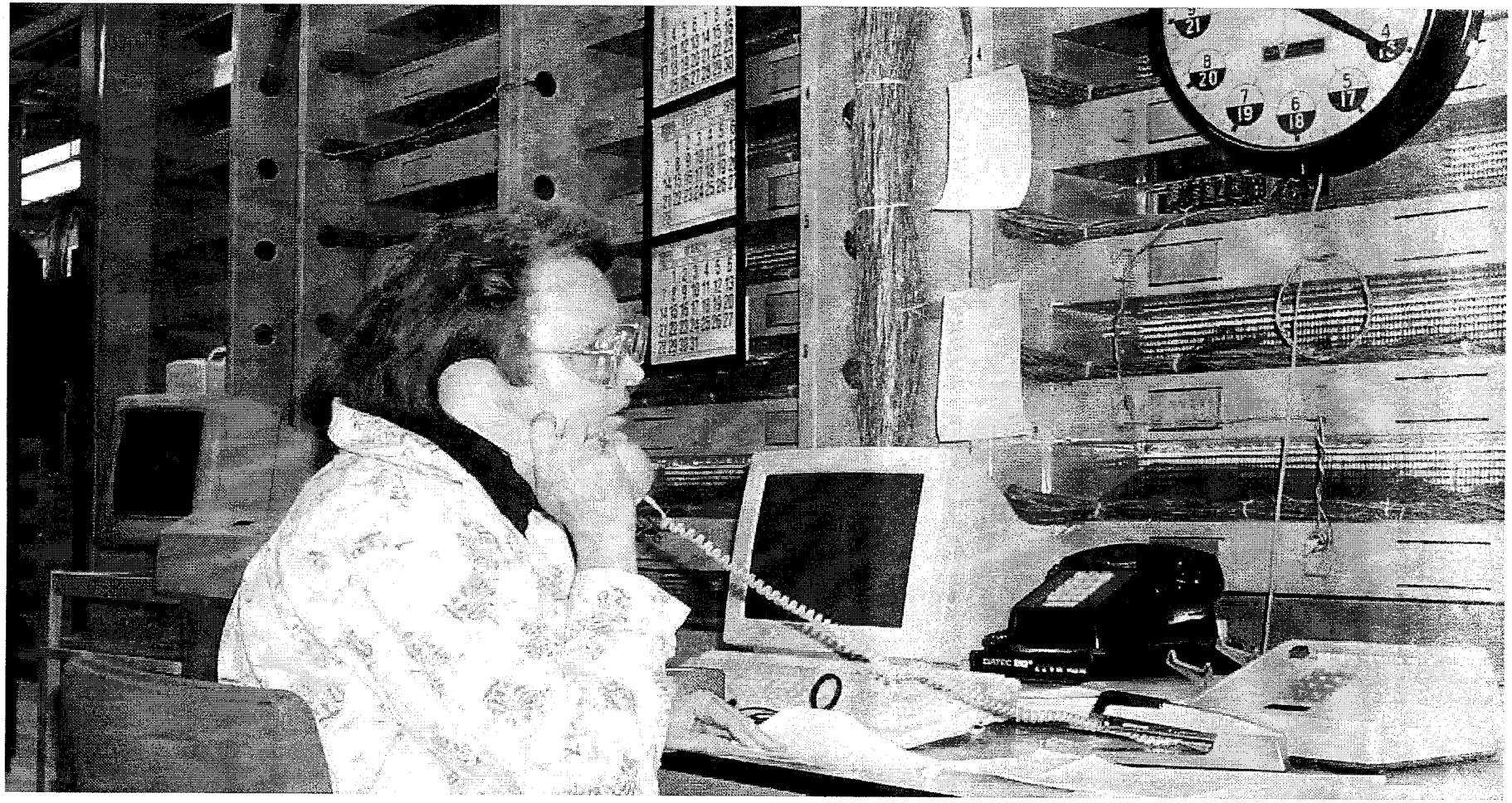

BELLSOUTH

BellSouth Telecommunications, Inc.
Legal Department
1025 Lenox Park Boulevard
Suite 6C01
Atlanta, GA 30319-5309

bennett.ross@bellsouth.com

Bennett L. Ross
General Counsel - Georgia

404 986 1718
Fax 404 986 1800

November 7, 2003

DELIVERED BY HAND

Mr. Reece McAlister
Executive Secretary
Georgia Public Service Commission
244 Washington Street, S.W.
Atlanta, GA 30334-5701

Re: *FCC's Triennial Review Order Regarding the Impairment of Local Switching for Mass Market Customers;* Docket No. 17749-U

Dear Mr. McAlister:

Enclosed please find an original and four (4) copies, as well as an electronic version, of BellSouth Telecommunications, Inc.'s ("BellSouth") Objections and Responses to AT&T Communications of the Southern States, LLC's First Interrogatories and First Request for Production of Documents and BellSouth's Statement of Confidentiality. I would appreciate your filing same in the above-referenced proceeding and returning the two (2) extra copies stamped "filed" in the enclosed self-addressed and stamped envelopes. By copy of this letter, the trade secret information will be provided to Ken Ellison and should be treated consistent with the Commission's trade secret rules.

I thank you for your attention to this matter.

Yours very truly,

Bennett L. Ross (pmc)

Bennett L. Ross

BLR:nvd
Enclosures

cc: Mr. Leon Bowles (via electronic mail)
Ms. Kristy Holley (via electronic mail)
Daniel S. Walsh, Esquire (via electronic mail)
Mr. Ken Ellison (proprietary information)
Parties of Record (via electronic mail)

512065/512059/510758/510767

RESPONSE: BellSouth is currently in the process of gathering this information. Since this information must be pulled from several sources and then cross-referenced for verification purposes, BellSouth needs additional time to respond to this interrogatory request and will supplement this response as soon as possible, but in any event, no later than December 2, 2003.

INTERROGATORY NO. 11: Provide the average time spent by BellSouth Central Office personnel who work directly on the Main Distribution Frame or other frames to conduct a single cutover on a single order, separated between each type or classification of cutover provided by BellSouth, including, but not limited to, "non-coordinated," "coordinated," "coordinated time-specific," or "bulk" cutovers, and explain how this was calculated.

RESPONSE: Presently, the average times spent by BellSouth Central Office personnel to conduct a single cutover for a non-designed SL1 loop on a single order are:

Activity	1st Loop (Minutes)	Additional Loops (Minutes)
non-coordinated cutover	30	21
coordinated cutover	40	23
coordinated time-specific cutover	50	25
Bulk (with coordination) cutover	40	23

All of the times are based on Subject Matter Expert estimates.
In addition, see the response to Item No. 43.

INTERROGATORY NO. 12: Provide the average time spent by BellSouth Central Office personnel who work directly on the Main Distribution Frame or other frames to conduct multiple cutovers contained on a single order, separated between each type or classification of cutover provided by BellSouth, including, but not limited to, "coordinated," "coordinated time-specific," or "bulk" cutovers, and explain how this was calculated.

RESPONSE: Please see BellSouth's responses to Item Nos. 11 and 43.

REQUEST: Provide the average time spent by BellSouth Central Office personnel who work directly on the Main Distribution Frame or other frames to conduct a single cutover on a single order, separated between each type or classification of cutover provided by BellSouth, including, but not limited to, "non-coordinated," "coordinated," "coordinated time-specific," or "bulk" cutovers, and explain how this was calculated.

SUPPLEMENTAL RESPONSE:

Presently, the average times spent by BellSouth Central Office personnel to conduct a single cutover for a non-designed SL1 loop on a single order are:

Activity	1st Loop (Minutes)	Additional Loops (Minutes)
non-coordinated cutover	26	17
coordinated cutover	36	19
coordinated time-specific cutover	36	19
bulk (with coordination) cutover	36	19

All of the times are based on Subject Matter Expert estimates. See also BellSouth's response to AT&T's First Set of Interrogatories, Item No. 43.

REQUEST: In BellSouth's Ex Parte in FCC Docket 01-338, filed December 24, 2002, on page 7, a table sets forth BellSouth's calculation of the time required to convert the "Top 20 UNE-P wire centers" to UNE-L or EELs. Provide answers to the following questions regarding that table:

(a) How many technicians were planned to work per shift, per wire center, to accomplish these conversions?
(b) How many conversions were planned per technician, per shift in each of the twenty wire centers?
(c) What is the maximum amount of new migrations BellSouth would be able to complete during the 3 –9 months these conversions would take place?
(d) How many UNE-P customers exist in these 20 wire centers as of September 1, 2003?

SUPPLEMENTAL RESPONSE:

(a) The assumption was that each of the Top 20 UNE-P wire centers, shown on page 7 of BellSouth's December 24, 2002, ex parte, have large frames and that there would typically be 6 technicians working on the frame during the normal day shift, with a maximum of 12 technicians able to work on the frame at any given time. Two shifts were assumed (except for the HLWDFLPE wire center where some third shift work was assumed) per day, with 6 technicians performing cuts during the day shift and 12 technicians performing cuts during the night shift, for an average of 9 technicians per wire center per day.

(b) The number of conversions per technician per shift in each of the twenty wire centers works out to be approximately 11.5, which results in approximately 104 conversions per wire center per day. In HLWDFLPE, assuming some third shift work, the number of conversions per technician per shift is approximately 13, which results in approximately 156 conversions per day.

(c) There is no set number of conversions that BellSouth has established. BellSouth uses plan size methods to monitor staffing levels to ensure that expected conversion volumes can be met.

SUPPLEMENTAL RESPONSE CONT.):

(d) The information responsive to this request is available via the following URL link: http://bellsouthcorp.com/policy/triennialreview/filings/2003-12-03/

BELLSOUTH

BellSouth
Suite 900
1133-21st Street, N.W.
Washington, D.C. 20036-3351

robert.blau@bellsouth.com

Robert T. Blau, Ph.D., CFA
Vice President-Executive and
Federal Regulatory Affairs

202 463-4108
Fax 202 463-4631

December 24, 2002

Ms Marlene H. Dortch
Secretary
Federal Communications Commission
445 12th Street, S.W.
Washington, D.C. 20554

Re: Ex Parte in WC Docket No. 01-338

Dear Ms Dortch:

On December 23, 2002, Pete Martin, Jonathan Banks, Keith Milner, Ken Ainsworth and the undersigned met with William Maher, Jeffrey Carlisle and Rich Lerner of the Wireline Competition Bureau.

The purpose of this meeting was to discuss BellSouth's ability to hot-cut UNE-P to UNE-L lines, as well as BellSouth retail to UNE-L lines, in a timely and efficient manner. Details of the discussion are summarized in the attached document.

In accordance with Section 1.1206, I am filing this notice electronically and request that you please place them in the record of the proceeding identified above.

Sincerely,

Robert T. Blau/pdl

Attachment

cc: William Maher
Jeffrey Carlisle
Rich Lerner

Conversion of the Embedded UNE-P Base – Top 20 UNE-P Wire Centers

CO	UNE-P Bus Units	UNE-P Res Units	Total UNE-Ps	Months required to convert 100% of UNE-Ps to UNE-L and/or EELs	Months required to convert 30% of existing UNE-Ps to UNE-L and/or EELs	# of Collocation Arrangements by CLECs that are also providing UNE-Ps
HLWDFLPE Total	2,448	22,154	24,602	9.00	3.55	5
MIAMFLHL Total	3,177	12,883	16,060	7.73	2.32	4
HLWDFLWH Total	2,253	12,253	14,506	6.98	2.10	6
PRRNFLMA Total	2,433	10,647	13,080	6.30	1.89	4
MRTTGAMA Total	2,253	9,138	11,391	5.48	1.65	8
MIAMFLCA Total	1,290	9,843	11,133	5.36	1.61	2
PMBHFLCS Total	1,731	8,858	10,589	5.10	1.53	2
LRVLGAOS Total	1,414	7,982	9,396	4.52	1.36	2
MIAMFLWD Total	494	8,094	8,588	4.13	1.24	1
PMBHFLMA Total	2,258	6,205	8,463	4.07	1.22	5
WPBHFLGA Total	1,471	6,922	8,393	4.04	1.21	4
NDADFLBR Total	943	7,094	8,037	3.87	1.16	1
FTLDFLOA Total	1,358	6,675	8,033	3.87	1.16	3
FTLDFLJA Total	1,570	6,456	8,026	3.86	1.16	3
MIAMFLPL Total	5,353	1,912	7,265	3.50	1.05	4
WDSTGACR Total	1,165	6,014	7,179	3.46	1.04	2
FTLDFLPL Total	1,897	5,280	7,177	3.46	1.04	5
NDADFLAC Total	1,565	5,568	7,133	3.43	1.03	2
RSWLGAMA Total	1,391	5,515	6,906	3.33	1.00	7
SMYRGAMA Total	971	5,926	6,897	3.32	1.00	6
Total (Top 20 COs)	37,435	165,419	202,854			76
Grand Total (all COs)	576,297	821,002	1,397,299			898

NOTES: (1) Months required to convert 100% of UNE-Ps based on 2 shifts, except for HLWDFLPE, where some third shift work is included.
(2) Based on a mix of SL1 and SL2 loops.

Hot Cut Rates - First

Hot Cut Option	Cost Ref. No.	Rate Elements	AL	FL	GA	KY	LA	MS	NC	SC	TN
1	SL1 LOOP										
	A.1.1	SL1 Loop NRC (1st)	$37.81	$49.57	$42.54	$46.66	$36.54	$37.92	$36.54	$37.92	$31.99
	N.1.1	Electronic Service Order	$5.83	$1.52	$0.55	$7.88	$2.98	$5.70	$2.98	$5.92	$0.00
		TOTAL SL1 Loop Hot Cut (1st)	*$43.64*	*$51.09*	*$43.09*	*$54.54*	*$39.52*	*$43.62*	*$39.52*	*$43.84*	*$31.99*
2	SL1 LOOP with Order Coordination										
	A.1.1	SL1 Loop NRC (1st)	$37.81	$49.57	$42.54	$46.66	$36.54	$37.92	$36.54	$37.92	$31.99
	N.1.5	Order Coordination	$8.15	$9.00	$16.11	$9.00	$7.92	$8.20	$7.92	$8.17	$36.52
	N.1.1	Electronic Service Order	$5.83	$1.52	$0.55	$7.88	$2.98	$5.70	$2.98	$5.92	$0.00
		TOTAL SL1 Loop Hot Cut (1st)	*$51.79*	*$60.09*	*$59.20*	*$63.54*	*$47.44*	*$51.82*	*$47.44*	*$52.01*	*$68.51*
3	SL1 LOOP with Order Coordination and OC for Specified Conversion Time										
	A.1.1	SL1 Loop NRC (1st)	$37.81	$49.57	$42.54	$46.66	$36.54	$37.92	$36.54	$37.92	$31.99
	N.1.5	Order Coordination	$8.15	$9.00	$16.11	$9.00	$7.92	$8.20	$7.92	$8.17	$36.52
	N.1.6	Order Coordination for Specified Conversion Time	$18.09	$23.02	$35.74	$23.01	$17.56	$18.19	$17.56	$18.13	$34.29
	N.1.1	Electronic Service Order	$5.83	$1.52	$0.55	$7.88	$2.98	$5.70	$2.98	$5.92	$0.00
		TOTAL SL1 Loop Hot Cut (1st)	*$69.88*	*$83.11*	*$94.94*	*$86.55*	*$65.00*	*$70.01*	*$65.00*	*$70.14*	*$102.80*
4	SL2 LOOP (Order Coordination included in Loop NRC)										
	A.1.2	SL2 Loop NRC (1st)	$88.00	$135.75	$104.17	$134.89	$102.10	$105.96	$102.10	$105.98	$75.06
	N.1.1	Electronic Service Order	$5.83	$1.52	$0.55	$7.88	$2.98	$5.70	$2.98	$5.92	$0.00
		TOTAL SL2 Loop Hot Cut (1st)	*$93.83*	*$137.27*	*$104.72*	*$142.77*	*$105.08*	*$111.66*	*$105.08*	*$111.90*	*$75.06*
5	SL2 LOOP (Order Coordination included in Loop NRC) with OC for Specified										
	A.1.2	SL2 Loop NRC (1st)	$88.00	$135.75	$104.17	$134.89	$102.10	$105.96	$102.10	$105.98	$75.06
	N.1.6	Order Coordination for Specified Conversion Time	$18.09	$23.02	$35.74	$23.01	$17.56	$18.19	$17.56	$18.13	$34.29
	N.1.1	Electronic Service Order	$5.83	$1.52	$0.55	$7.88	$2.98	$5.70	$2.98	$5.92	$0.00
		TOTAL SL2 Loop Hot Cut (1st)	*$111.92*	*$160.29*	*$140.46*	*$165.78*	*$122.64*	*$129.85*	*$122.64*	*$130.03*	*$109.35*

Hot Cut Rates - Additional

Hot Cut Option	Cost Ref. No.	Rate Elements	AL	FL	GA	KY	LA	MS	NC	SC	TN
	SL1 LOOP										
1	A.1.1	SL1 Loop NRC (Add)	$17.56	$22.83	$31.33	$22.57	$16.87	$17.55	$16.87	$17.62	$20.02
	N.1.1	Electronic Service Order	$5.83	$1.52	$0.55	$7.88	$2.98	$5.70	$2.98	$5.92	$0.00
		TOTAL SL1 Loop Hot Cut (Add)	*$23.39*	*$24.35*	*$31.88*	*$30.45*	*$19.85*	*$23.25*	*$19.85*	*$23.54*	*$20.02*
	SL1 LOOP with Order Coordination										
2	A.1.1	SL1 Loop NRC (1st)	$17.56	$22.83	$31.33	$22.57	$16.87	$17.55	$16.87	$17.62	$20.02
	N.1.5	Order Coordination	$8.15	$9.00	$16.11	$9.00	$7.92	$8.20	$7.92	$8.17	$36.52
	N.1.1	Electronic Service Order	$5.83	$1.52	$0.55	$7.88	$2.98	$5.70	$2.98	$5.92	$0.00
		TOTAL SL1 Loop Hot Cut (Add)	*$31.54*	*$33.35*	*$47.99*	*$39.45*	*$27.77*	*$31.45*	*$27.77*	*$31.71*	*$56.54*
	SL1 LOOP with Order Coordination and OC for Specified Conversion Time										
3	A.1.1	SL1 Loop NRC (1st)	$17.56	$22.83	$31.33	$22.57	$16.87	$17.55	$16.87	$17.62	$20.02
	N.1.5	Order Coordination	$8.15	$9.00	$16.11	$9.00	$7.92	$8.20	$7.92	$8.17	$36.52
	N.1.6	Order Coordination for Specified Conversion Time	$18.09	$23.02	$35.74	$23.01	$17.56	$18.19	$17.56	$18.13	$34.29
	N.1.1	Electronic Service Order	$5.83	$1.52	$0.55	$7.88	$2.98	$5.70	$2.98	$5.92	$0.00
		TOTAL SL1 Loop Hot Cut (Add)	*$49.63*	*$56.37*	*$83.73*	*$62.46*	*$45.33*	*$49.64*	*$45.33*	*$49.84*	*$90.83*
	SL2 LOOP (Order Coordination Included in Loop NRC)										
4	A.1.2	SL2 Loop NRC (1st)	$55.00	$82.47	$78.10	$81.87	$65.72	$68.28	$65.72	$68.43	$48.20
	N.1.1	Electronic Service Order	$5.83	$1.52	$0.55	$7.88	$2.98	$5.70	$2.98	$5.92	$0.00
		TOTAL SL2 Loop Hot Cut (Add)	*$60.83*	*$83.99*	*$78.65*	*$89.75*	*$68.70*	*$73.98*	*$68.70*	*$74.35*	*$48.20*
	SL2 LOOP (Order Coordination Included in Loop NRC) with OC for Specified										
5	A.1.2	SL2 Loop NRC (1st)	$55.00	$82.47	$78.10	$81.87	$65.72	$68.28	$65.72	$68.43	$48.20
	N.1.6	Order Coordination for Specified Conversion Time	$18.09	$23.02	$35.74	$23.01	$17.56	$18.19	$17.56	$18.13	$34.29
	N.1.1	Electronic Service Order	$5.83	$1.52	$0.55	$7.88	$2.98	$5.70	$2.98	$5.92	$0.00
		TOTAL SL2 Loop Hot Cut (Add)	*$78.92*	*$107.01*	*$114.39*	*$112.76*	*$86.26*	*$92.17*	*$86.26*	*$92.48*	*$82.49*

Attachment
Response to Item No. 1

CLLI	ADDRESS	CITY	STATE	ZIP	MANNED	HOST/REMOTE	HOST
ALBSALMA	1012 FIRST STREET N	ALABASTER	AL	35007	Y	HOST	
ALCYALMT	103 CHURCH STREET	ALEXANDER CITY	AL	35010	Y	HOST	
ALVLALMA	105 S HAMBRICK ST	ALBERTVILLE	AL	35950	Y	HOST	
ANTNALLE	314 GLADE RD LENLOCK	ANNISTON	AL	36205	Y	HOST	
ANTNALMT	1325 NOBLE STREET	ANNISTON	AL	36201	Y	HOST	
ANTNALOX	111 US HIGHWAY 78 W. - OX	ANNISTON	AL	36203	Y	HOST	
ATHNALER	COUNTY ROAD 25 AND SHAW R	ATHENS	AL	35611	N	REMOTE	ATHNALMADS0
ATHNALMA	204 WEST BRYAN STREET	ATHENS	AL	35611	Y	HOST	
ATTLALNM	202 3RD STREET NW	ATTALLA	AL	35954	Y	REMOTE	GDSDALMTDS0
AUBNALMA	138 N GAY ST	AUBURN	AL	36830	Y	HOST	
BLFNALMA	ROUTE 1 FOWL RIVER RD	BELLE FONTAINE	AL	36607	N	REMOTE	MOBLALSKDS0
BOAZALMA	202 BARTLETT STREET	BOAZ	AL	35957	Y	HOST	
BRHMALCH	3201 RIDGELEY ROAD	BIRMINGHAM	AL	35243	Y	HOST	
BRHMALCP	41 20TH AVENUE NW	BIRMINGHAM	AL	35215	Y	HOST	
BRHMALEL	8419 1ST AVE NORTH	BIRMINGHAM	AL	35206	Y	REMOTE	BRHMALCPDS0
BRHMALEN	1738 30TH STREET	BIRMINGHAM	AL	35218	Y	HOST	
BRHMALEW	1730 SIXTH AVENUE SOUTH	BIRMINGHAM	AL	35210	Y	HOST	
BRHMALFO	1132 FORESTDALE BLVD	BIRMINGHAM	AL	35214	Y	HOST	
BRHMALFS	1201 19TH STREET SOUTH	BIRMINGHAM	AL	35205	Y	HOST	
BRHMALHW	1920 OXMOOR ROAD	BIRMINGHAM	AL	35209	Y	HOST	
BRHMALMT	1715 6th AVE NORTH	BIRMINGHAM	AL	35203	Y	HOST	
BRHMALOM	5332 US HIGHWAY 280 SOUTH	BIRMINGHAM	AL	35243	Y	HOST	
BRHMALOX	136 WEST OXMOOR RD	BIRMINGHAM	AL	35209	Y	HOST	
BRHMALRC	1890 DATA DRIVE	BIRMINGHAM	AL	35244	Y	HOST	
BRHMALTA	1329 PARK AVE	BIRMINGHAM	AL	35217	Y	HOST	
BRHMALVA	1480 MONTGOMERY HIGHWAY	BIRMINGHAM	AL	35216	Y	HOST	
BRHMALWE	3201 ALEMEDA AVE S W	BIRMINGHAM	AL	35221	Y	REMOTE	BSMRALHTDS0
BRHMALWL	5544 1ST AVENUE SOUTH	BIRMINGHAM	AL	35212	Y	HOST	
BRPTALMA	JOHNSON STREET	BRIDGEPORT	AL	35740	N	REMOTE	STSNALMADS1
BRTOALMA	329 EVERGREEN AVE	BREWTON	AL	36426	Y	HOST	
BSMRALBP	7730 ALLIANCE-SHORT CREEK	MULGA	AL	35118	N	REMOTE	BSMRALHTDS0
BSMRALBU	7855 OLD TUSCALOOSA HIGHW	MC CALLA	AL	35111	N	REMOTE	BSMRALHTDS0
BSMRALHT	3170 WARRIOR RIVER RD	HUEYTOWN	AL	35023	Y	HOST	
BSMRALMA	1630 3RD AVENUE NORTH	BESSEMER	AL	35020	Y	HOST	
BYMNALMA	114 WEST 3RD	BAY MINETTE	AL	36507	Y	REMOTE	MOBLALSFDS0
CALRALMA	17TH AVENUE AND 14TH STRE	CALERA	AL	35040	N	REMOTE	ALBSALMADS0

CHBGALMA	18TH AVENUE AND 14TH STRE	CHILDERSBURG	AL	35044	N	REMOTE	SYLCALMTDS0
CHLSALMA	1905 OLD HIGHWAY 280	CHELSEA	AL	35043	N	REMOTE	BRHMALOMDS0
CLANALMA	105 ENTERPRISE ROAD	CLANTON	AL	35045	Y	HOST	
CLMBALMA	317 NORTH MAIN STREET	COLUMBIANA	AL	35051	N	REMOTE	ALBSALMADS0
CLMNALFA	117 WESLEY AVE	CULLMAN	AL	35055	N	REMOTE	CLMNALMADS0
CLMNALJC	1418 CITY ROAD 940	CULLMAN	AL	35055	N	REMOTE	CLMNALMADS0
CLMNALMA	401 4TH AVENUE SE	CULLMAN	AL	35055	Y	HOST	
CNVIALMA	MAIN STREET	CENTERVILLE	AL	35042	N	REMOTE	BSMRALHTDS0
CRDVALMA	204 GREEN AVE	CORDOVA	AL	35550	N	REMOTE	JSPRALMTDS0
CRHLALNM	308 NW 4TH STREET	CARBON HILL	AL	35549	N	REMOTE	JSPRALMTDS0
CRLDALMA	COLLEGE STREET & ALT HIGH	COURTLAND	AL	35618	N	REMOTE	SHFDALMTDS0
CTRNALNM	8185 STATE STREET	CITRONELLE	AL	36522	N	REMOTE	MOBLALSADS0
CYTNALMA	EAST COLLEGE ST	CLAYTON	AL	36016	N	REMOTE	EUFLALMADS0
DCTRALMT	425 GRANT STREET	DECATUR	AL	35601	Y	HOST	
DDVLALMA	LAFAYETTE STREET	DADEVILLE	AL	36853	N	REMOTE	ALCYALMTDS0
DMPLALMA	303 E PETTUS ST	DEMOPOLIS	AL	36732	Y	HOST	
DORAALMA	SUMITON STREET AND BRYANT	DORA	AL	35062	N	REMOTE	BRHMALFODS0
EUFLALMA	134 N RANDOLPH ST	EUFAULA	AL	36027	Y	HOST	
EUTWALBO	U S HWY 11	BOLIGEE	AL	35443	N	REMOTE	TSCLALMTDS0
EUTWALMA	309 EUTAW AVE N	EUTAW	AL	35462	Y	REMOTE	TSCLALMTDS0
EVRGALMA	204 RURAL ST	EVERGREEN	AL	36401	N	REMOTE	BRTOALMADS0
FLRNALMA	327 N PINE ST	FLORENCE	AL	35630	Y	HOST	
FMTNALMT	214 HOUSTON STREET	FLOMATON	AL	36441	N	REMOTE	BRTOALMADS0
FRHPALMA	201 SECTION STREET	FAIRHOPE	AL	36532	Y	HOST	
FTDPALMA	E JONES STREET	FORT DEPOSIT	AL	36274	N	REMOTE	WTMPALMADS0
FTPYALMA	212 5TH ST NW	FORT PAYNE	AL	35967	Y	REMOTE	ALVLALMADS0
GDSDALHS	1813 MEIGHAN BOULEVARD	GADSDEN	AL	35901	Y	HOST	
GDSDALMT	748 FORREST AVE	GADSDEN	AL	35901	Y	HOST	
GDSDALRD	206 E GRAND AVE	RAINBOW CITY	AL	35906	Y	HOST	
GDWRALMA	MAIN STREET	GOODWATER	AL	35072	N	REMOTE	ALCYALMTDS0
GNBOALMA	1006 WHEELAN STREET	GREENSBORO	AL	36744	N	REMOTE	DMPLALMADS0
GRDLALNM	404 BROOKWOOD COURT	GARDENDALE	AL	35071	Y	REMOTE	WRRRALNMDS0
GRLYALMA	128 JOPLIN ST & HTSVL AV	GURLEY	AL	35748	N	REMOTE	HNVIALLWDS0
GTVLALNM	509 BLOUNT AVENUE	GUNTERSVILLE	AL	35976	Y	REMOTE	ALVLALMADS0
GYVLALNM	108 CENTER AVE NW	GRAYSVILLE	AL	35073	N	REMOTE	WRRRALNMDS0
HLVIALMA	ELMORE COUNTY ROAD 23	HOLTVILLE	AL	36067	N	REMOTE	WTMPALMADS0
HNVIALLW	2804 MASTIN LAKE RD N W	HUNTSVILLE	AL	35810	Y	HOST	

HNVIALMT	310 FOUNTAIN CIR S W	HUNTSVILLE	AL	35801	Y	HOST	
HNVIALPW	7600 S MEMORIAL PARKWAY S	HUNTSVILLE	AL	35802	Y	HOST	
HNVIALRA	BLDG 5298-REDSTONE ARSENA	HUNTSVILLE	AL	35808	Y	HOST	
HNVIALRW	6810 MOQUIN DR	HUNTSVILLE	AL	35846	N	HOST	
HNVIALSD	106 WYNN DRIVE	HUNTSVILLE	AL	35801	N	REMOTE	HNVIALRADS0
HNVIALUN	5701 HOLMES AVE	HUNTSVILLE	AL	35816	Y	HOST	
HNVLALBR	7960 HIGHWAY 69 S	BREMEN	AL	35033	N	REMOTE	CLMNALMADS0
HNVLALNM	RT. 5, BOX BB1	HANCEVILLE	AL	35077	Y	REMOTE	CLMNALMADS0
HRBOALOM	MAIN STREET BTWN OWENS &	HURTSBORO	AL	36860	N	REMOTE	OPLKALMTDS0
HRTSALNM	251 CHERRY STREET	HARTSELLE	AL	35640	Y	REMOTE	DCTRALMTDS0
HRTSALPE	HWY 67 SOMMERVILLE	PENCE	AL	35670	N	REMOTE	CLMNALMADS0
HZGRALMA	12348 HIGHWAY 231 NORTH	HAZELGREEN	AL	35750	N	REMOTE	HNVIALLWDS0
JCSNALNM	135 WEST CHURCH ST	JACKSON	AL	36545	Y	REMOTE	MOBLALSKDS0
JCVLALMA	400 NORTH SPRING ST	JACKSONVILLE	AL	36265	Y	HOST	
JSPRALMT	1701-4TH AVE	JASPER	AL	35501	Y	HOST	
KLLNALMA	LOCK 6 RD KILLEN	KILLEN	AL	35645	N	REMOTE	SHFDALMTDS0
LFYTALRS	REAR - ALABAMA AVENUE	LAFAYETTE	AL	36862	N	REMOTE	OPLKALMTDS0
LGTNALMA	2075 OAK ST	LEIGHTON	AL	35646	N	REMOTE	SHEFFIELD
LNDNALMA	MAIN & SOUTH ST	LINDEN	AL	36748	N	REMOTE	DMPLALMADS0
LVTNALMA	100 LAFAYETTE ST	LIVINGSTON	AL	35470	N	HOST	
LXTNALMA	HIGHWAY 101 &71	LEXINGTON	AL	35648	N	REMOTE	SHFDALMTDS0
MARNALNM	WASHINGTON & GREEN ST	MARION	AL	36756	N	REMOTE	DMPLALMADS0
MCINALMA	COUNTY ROAD 35	MCINTOSH	AL	36553	N	REMOTE	MOBLALAZDS0
MDSNALNM	3406 WALL TRIANA HIGHWAY	MADISON	AL	35824	Y	HOST	
MDSNALOM	SULLIVAN STREET	MADISON	AL	35758	N	REMOTE	MDSNALNMDS0
MNFDALMA	OLD MCELDERRY RD	MUNFORD	AL	36268	N	REMOTE	TLDGALMADS0
MNTVALNM	262 MAIN STREET	MONTEVALLO	AL	35115	N	HOST	
MOBLALAP	230 S SCHILLINGER RD	MOBILE	AL	36608	Y	HOST	
MOBLALAZ	101 NORTH FRANKLIN STREET	MOBILE	AL	36602	Y	HOST	
MOBLALBF	3245 HAMILTON BOULEVARD	MOBILE	AL	36582	Y	REMOTE	MOBLALSKDS0
MOBLALOS	2155 OLD SHELL RD	MOBILE	AL	36607	Y	HOST	
MOBLALPR	504 N WILSON AVE	PRICHARD	AL	36610	Y	HOST	
MOBLALSA	22 NORTH SHELTON BEACH RD	SARALAND	AL	36571	Y	HOST	
MOBLALSE	9135 MOFFAT ROAD	SEMMES	AL	36575	Y	HOST	
MOBLALSF	6515 HIGHWAY 90 EAST	SPANISH FORT	AL	36527	Y	HOST	
MOBLALSH	4553 OLD SHELL RD	MOBILE	AL	36608	Y	HOST	
MOBLALSK	4090 GOVERNMENT BLVD	MOBILE	AL	36693	Y	HOST	

MOBLALTH	5680 THEODORE DAWES RD	THEODORE	AL	36582	Y	REMOTE	MOBLALSKDS0
MOLTALNM	624 WALNUT STREET	MOULTON	AL	35650	Y	HOST	
MPVLALMA	HIGHWAY 22	MAPLESVILLE	AL	36750	N	REMOTE	SELMALMTDS0
MTGMALDA	3861 ATLANTA HWY	MONTGOMERY	AL	36109	Y	HOST	
MTGMALMB	ALABAMA HIGHWAY 143	MONTGOMERY	AL	36054	N	REMOTE	WTMPALMADS0
MTGMALMT	38 WASHINGTON AVE	MONTGOMERY	AL	36104	Y	HOST	
MTGMALNO	540 EAST SOUTH BLVD	MONTGOMERY	AL	36116	Y	HOST	
MTVRALMA	2020 ST STEPHENS RD	MOUNT VERNON	AL	36560	Y	REMOTE	MOBLALAZDS0
OHTCALMA	HWY 62 ALEX. & OHATCHEE	OHATCHEE	AL	36271	N	REMOTE	ANTNALLEDS0
OPLKALMT	207 SOUTH 7TH STREET	OPELIKA	AL	36801	Y	HOST	
PDMTALMA	102 FRONT STREET	PIEDMONT	AL	36272	N	REMOTE	JCVLALMADS0
PHCYALFM	RIDGE RD	FORT MITCHELL	AL	36856	N	REMOTE	PHCYALMADS0
PHCYALMA	1600 OPELIKA RD	PHENIX CITY	AL	36867	Y	HOST	
PNSNALMA	400 BELL WATER DRIVE	PINSON	AL	35126	Y	HOST	
PRSHALNM	100 THIRD STREET	PARRISH	AL	35580	N	REMOTE	JSPRALMTDS0
PRVLALMA	201 WETUMPKA ST	PRATTVILE	AL	36067	Y	HOST	
RDBAALMA	HWY 24W &4TH AV	RED BAY	AL	35582	N	REMOTE	RLVLALMADS0
RLVLALMA	101 WEST LIMESTONE	RUSSELLVILLE	AL	35653	Y	HOST	
RRVLALMA	106 WEST COLLEGE ST	ROGERSVILLE	AL	35652	N	REMOTE	SHFDALMTDS0
SELMALMT	212 WASHINGTON ST	SELMA	AL	36701	Y	HOST	
SHFDALMT	411 NASHVILLE AVE	SHEFFIELD	AL	35660	Y	HOST	
STSNALMA	200 KANSAS AVE	STEVENSON	AL	35772	Y	HOST	
SYLCALMT	105 EAST SECOND STREET	SYLACAUGA	AL	35150	Y	HOST	
THVLALMA	322 SAFFORD AVE	THOMASVILLE	AL	36784	Y	REMOTE	SELMALMTDS0
TLDGALMA	109 BRIGNOLI ST	TALLADEGA	AL	35160	Y	HOST	
TLDGALRF	TALLADEGA CTY RD 42 & 43	RENFROE	AL	35160	N	REMOTE	TLDGALMADS0
TROYALMA	400 MADISON ST	TROY	AL	36081	Y	REMOTE	EUFLALMADS0
TSCLALDH	1325 39TH AVE EAST	TUSCALOOSA	AL	35404	Y	HOST	
TSCLALMT	2101 7TH STREET	TUSCALOOSA	AL	35401	Y	HOST	
TSCLALNO	6015 HWY 171	NORTHPORT	AL	35476	Y	HOST	
TSKGALMA	210 W NORTHSIDE ST	TUSKEGEE	AL	36083	Y	REMOTE	AUBNALMADS0
TWCKALMA	HWY 20 & HAZELWOOD ST	TOWN CREEK	AL	35672	N	REMOTE	SHFDALMTDS0
UNTWALNM	FRANKLIN STREET	UNIONTOWN	AL	36786	Y	REMOTE	DMPLALMADS0
VNCNALMA	ALABAMA HIGHWAY 25	VINCENT	AL	35178	N	REMOTE	BRHMALOMDS0
WBTNALNM	SOUTHSIDE & MAIN STREET	WEST BLOCTON	AL	35184	N	REMOTE	BSMRALHTDS0
WRRRALNM	MOSS STREET AND SECOND ST	WARRIOR	AL	35180	N	HOST	
WTMPALMA	MILLY FRANCES ST	WETUMPKA	AL	36092	Y	HOST	

YORKALMA	210 STEVENS STREET	YORK	AL	36925	Y	REMOTE	TSCLALMTDS0

BELLSOUTH

BellSouth Interconnection Services
675 West Peachtree Street
Room 34H71
Atlanta, Georgia 30375

Laurel MacKenzie
(404) 927-7575
Fax: (404) 927-4985

May 5, 2003

Ms. Denise Berger
AT&T Local Services
Operations Assistant Vice President
Room 12256
1200 Peachtree St. NE
Atlanta, GA 30309

Dear Ms. Berger:

This is in response to your e-mail dated March 6, 2003, posing additional questions concerning the conversion of customers from Unbundled Network Element – Platform (UNE-P) to UNE-Loop (UNE-L). The following are BellSouth's responses to your questions:

AT&T Question #1: Will BellSouth support the transition of IDLC UNE-P customers to UNE Loop as a part of this proposed migration? If not, what is a viable alternative.

BellSouth Response: As part of this proposed migration, BellSouth will support transition of Integrated Digital Loop Carrier (IDLC) UNE-P customers to UNE-L when alternative arrangements exist. Attachment 2, Section 3.11.1 of AT&T's Interconnection Agreement specifies the viable alternatives.

AT&T Question #2: Will BellSouth identify the IDLC customers as part of its project planning process? If so, will BellSouth also identify the alternative facilities onto which it will move customers prior to the migration?

BellSouth Response: During the project planning process, BellSouth will identify the IDLC UNE-P customers and will assign alternate facilities, when such facilities exist, during the service order process.

AT&T Question #3: Does BellSouth plan to move the customer to copper prior to the migration? If so, how will BellSouth schedule that interim transition? If not, how will BellSouth care for the change in facilities?

BellSouth Response: Currently, BellSouth has no plans to convert IDLC UNE-P customers to copper on an interim basis prior to the negotiated due date of the actual conversion. BellSouth will perform the conversion on the due date as per existing processes being utilized today. This process, as well as the CLEC notification, is based on requested service type (SL1/SL2) and requested conversion type (coordinated or non-coordinated).

AT&T Question #4: AT&T assumes that dispatch technicians will be required to migrate IDLC customers. How does BellSouth plan to schedule these customers in order to minimize dispatch technician overtime?

BellSouth Response: It is expected that IDLC UNE-P customers being converted to UNE-L will require a field dispatch. Upon initial receipt of the project planning notification from the CLEC, the project manager will negotiate due dates with the network organizations based on volumes and required dispatches. These dates will be set to maximize field resources with minimal or no use of overtime.

AT&T Question #5: What percentage of end-user customers by state in BellSouth's territory are on IDLC?

BellSouth Response: The following is the percentage by state within BellSouth territory of end-user customers of all carriers on IDLC:

AL 22.7%,	MS 22,7%
FL 31.8%,	NC 26.0%
GA 27.0%,	SC 36.3%
KY 13.4%,	TN 21.8%
LA 12.5%	

The questions that you submitted to Professional Services did not specifically pertain to the New Business Request (NBR) AT&T submitted earlier and, therefore, have required a longer response period. In the future, in an effort to facilitate quicker responses, please direct questions about general BellSouth practices to AT&T's Local Contract Manager within Jim Schenks' CLEC Care organization. CLEC Care has the resources assigned to AT&T to respond to your questions and interface with any department required to provide information in formulating an answer.

Sincerely,

Laurel MacKenzie

Laurel Mackenzie
Senior Manager – Professional Services
Interconnection Services Marketing

CC: Jim Schenks
Scott Kunze

REQUEST: With respect to the Coordinated Hot Cut Timeliness % Within Interval Measure, please provide all documents containing or pertaining to performance data, studies, or other information that support the benchmark of 95% within 4 hours window for IDLC loops.

RESPONSE: Additional time to provide loops where existing service is provided over IDLC is necessary due to the fact that the process for handling a hot cut conversion with IDLC is significantly different than with non-IDLC. As an example, moving a jumper and then testing the circuit can accomplish a very simple non-IDLC hot cut. However, when a hot cut involves IDLC, the facility to the customer's premise is integrated with BellSouth's digital switch. The facility must be separated from BellSouth's switch prior to the hot cut because the switching port is provided by the CLEC. This may require a transfer to a non-IDLC facility and may also require a technician at the customer's premise and in the BellSouth central office. Occasionally, hot cuts involving IDLC may also require the placement of non-IDLC facilities prior to the day of the hot cut.

The number of hot cuts involving IDLC is an appreciable percentage of the total number of hot cuts, and when an IDLC hot cut does occur, additional flexibility is required to dispatch the technicians at both ends of the circuit. In terms of volume, in July 2003, there were 526 hot cuts in Florida, and, of these, 146 (or 27.7%) involved IDLC. In August 2003, there were 520 hot cuts and, of these, 163 (or 31.3%) involved IDLC.

If the interval for hot cuts involving IDLC is less than four hours, then in order to satisfy this measurement, BellSouth will have to dispatch a technician prior to the time the hot cut is scheduled to make a line and station transfer (LST) to place the customer service on a non-integrated facility. This approach requires additional work time for the technician, which is currently performed before the scheduled hot cut. Although this extra work means additional cost to BellSouth, which is not covered in the price for the service, unless a technician is dispatched to perform the LST the day before the scheduled hot cut, BellSouth would be unable to meet a 15-minute interval for cutting over loops.
Given this, BellSouth has a separate benchmark interval for Measure P-7A, Coordinated Customers Conversions – Hot Cut Timeliness % within Interval and Average Interval for hot cuts involving Integrated Digital Loop Carrier ("IDLC") in order to account for the greater time required to coordinate these hot cuts. BellSouth has a benchmark of 95% within a 4-hour window. This allows

RESPONSE (CONT.):

BellSouth to dispatch the technician only once on the date the hot cut is scheduled to perform the station transfer to a non-IDLC facility, and to call the CWINS center when the technician is ready to perform the hot cut. The four-hour window would be 8 a.m. to 12 p.m. or 1 p.m. to 5 p.m. This four-hour window is consistent with the AM or PM dispatch strategy BellSouth currently has in place for other Provisioning work, providing the technicians sufficient time to complete all of the associated work with one dispatch in most cases.
On hot cuts involving IDLC, BellSouth would notify the CLEC by 10:30 a.m. the day before the scheduled cutover to advise the CLEC that IDLC is involved and that the four-hour window would apply.

The benchmark BellSouth proposes is consistent with the approach in New York, where Verizon has a four-hour window to cut over a loop served on IDLC. (See New York State Carrier-to-Carrier Guidelines Performance Standards and Reports, November 2002, PR-9 Hot Cut Performance.)

CLLI	Wire center	total IDLC loops	total spares	% compatible spares
AL	albsalma	9031	2403	26.6
AL	alcyalmt	1003	283	28.2
AL	alvlalma	2583	6	0.2
AL	antnalle	1335	549	41.1
AL	antnalmt	1219	541	44.4
AL	antnalox	3692	1690	45.8
AL	athnalma	2970	1456	49
AL	attlalnm	2831	553	19.5
AL	aubnalma	4948	779	15.7
AL	blfnalma	106	106	100
AL	boazalma	2661	693	26
AL	brhmalch	4177	1471	35.2
AL	brhmalcp	1450	223	15.4
AL	brhmalel	107	107	100
AL	brhmalen	215	75	34.9
AL	brhmalew	290	290	100
AL	brhmalfo	2	2	100
AL	brhmalfs	345	168	48.7
AL	brhmalhw	1867	1184	63.4
AL	brhmalmt	3286	1139	34.7
AL	brhmalom	5473	483	8.8
AL	brhmalox	1190	1190	100
AL	brhmalrc	5650	2387	42.2
AL	brhmalta	981	500	51
AL	brhmalva	670	254	37.9
AL	brhmalwe	167	167	100
AL	brhmalwl	173	173	100
AL	brptalma	243	87	35.8
AL	brtoalma	653	359	55
AL	bsmralbu	453	431	95.1
AL	bsmralht	919	133	14.5
AL	bsmralma	3049	1526	50
AL	bymnalma	2448	232	9.5
AL	calralma	977	646	66.1
AL	chbgalma	34	34	100
AL	chlsalma	1512	1365	90.3
AL	clanalma	561	124	22.1
AL	clmbalma	1521	378	24.9
AL	clmnalfa	480	467	97.3
AL	clmnaljc	456	182	39.9
AL	clmnalma	1813	1403	77.4
AL	cnvialma	226	108	47.8
AL	crldalma	321	321	100
AL	ctrnalnm	389	92	23.7
AL	cytnalma	61	0	0
AL	dctralmt	5922	1803	30.4
AL	ddvlalma	1443	215	14.9
AL	dmplalma	4	4	100
AL	doraalma	259	259	100
AL	euflalma	418	406	97.1
AL	eutwalma	138	138	100

AL	evrgalma	551	551	100
AL	flrnalma	4583	1118	24.4
AL	fmtnalmt	331	331	100
AL	frhpalma	2847	101	3.5
AL	ftdpalma	6	6	100
AL	ftpyalma	525	404	77
AL	gdsdalhs	1644	469	28.5
AL	gdsdalmt	1287	201	15.6
AL	gdsdalrd	2006	612	30.5
AL	gnboalma	127	44	34.6
AL	grdlalnm	603	410	68
AL	grlyalma	769	320	41.6
AL	gtvlalnm	579	382	66
AL	gyvlalnm	1131	503	44.5
AL	hlvialma	32	32	100
AL	hnvialiw	2453	954	38.9
AL	hnvialmt	3109	894	28.8
AL	hnvialpw	2582	713	27.6
AL	hnvialrw	1247	548	43.9
AL	hnvialun	4928	1318	26.7
AL	hnvlalnm	156	156	100
AL	hrboalom	17	17	100
AL	hrtsalnm	881	534	60.6
AL	hrtsalpe	2	2	100
AL	hzgralma	1575	842	53.5
AL	jcsnalnm	583	427	73.2
AL	jcvlalma	1780	3	0.2
AL	jspralmt	1035	442	42.7
AL	klinalma	1576	379	24
AL	lfytalrs	242	0	0
AL	lgtnalma	491	296	60.3
AL	lndnalma	90	0	0
AL	lvtnalla	8	8	100
AL	lxtnalma	153	153	100
AL	mcinalma	299	0	0
AL	mdsnalom	1570	336	21.4
AL	mntvalnm	287	287	100
AL	moblalap	5885	892	15.2
AL	moblalaz	940	940	100
AL	moblalbf	965	613	63.5
AL	moblalos	3171	1003	31.6
AL	moblalpr	73	67	91.8
AL	moblalsa	2079	1331	64
AL	moblalse	4417	1497	33.9
AL	moblalsf	4855	326	6.7
AL	moblalsh	3427	1056	30.8
AL	moblalsk	3484	966	27.7
AL	moblalth	4070	0	0
AL	moltalnm	328	236	72
AL	mpvlalma	108	108	100
AL	mtgmalda	3627	2668	73.6
AL	mtgmalmb	1539	468	30.4

AL	mtgmalmt	539	539	100
AL	mtgmalno	1151	395	34.3
AL	mtvralma	460	92	20
AL	ohtcalma	44	44	100
AL	oplkalmt	4900	1307	26.7
AL	pdmtalma	5	5	100
AL	phcyalfm	1258	479	38.1
AL	phcyalma	3914	881	22.5
AL	pnsnalma	601	256	42.6
AL	prvlalma	189	185	97.9
AL	rlvlalma	451	335	74.3
AL	rrvlalma	508	499	98.2
AL	selmalmt	1164	151	13
AL	shfdalmt	963	556	57.7
AL	stsnalma	488	461	94.5
AL	sylcalmt	964	171	17.7
AL	thvlalma	121	2	1.7
AL	tldgalma	804	125	15.5
AL	tldgalrf	254	254	100
AL	troyalma	354	354	100
AL	tsclaldh	1817	370	20.4
AL	tsclalmt	3368	676	20.1
AL	tsclalno	3979	94	2.4
AL	tskgalma	244	201	82.4
AL	twckalma	869	543	62.5
AL	vncnalma	729	302	41.4
AL	wbtnalnm	236	45	19.1
AL	wrrralnm	1438	557	38.7
AL	wtmpalma	783	261	33.3
FL	archflma	1207	1165	96.5
FL	bcrtflbt	12446	12446	100
FL	bcrtflsa	37159	8973	24.1
FL	bgpiflma	2748	2350	85.5
FL	bkvlfljf	13293	6951	52.3
FL	bldwflma	786	786	100
FL	blglflma	2430	2430	100
FL	bnnlflma	1806	1806	100
FL	brsnflma	2194	1113	50.7
FL	bybhflma	29668	19911	67.1
FL	ccbhflma	3718	3718	100
FL	cdkyflma	259	259	100
FL	cfldflma	2594	1376	53
FL	chplflja	1790	1641	91.7
FL	cntmflle	3619	2274	62.8
FL	cocoflma	29683	13297	44.8
FL	cocoflme	12329	5468	44.4
FL	cscyflba	1750	1468	83.9
FL	dbryfldl	8379	1806	21.6
FL	dbryflma	5015	2358	47
FL	deldflma	5676	5676	100
FL	dlbhflkp	9878	9260	93.7
FL	dlbhflma	4	4	100

CLEC "UNE-P" Voice with DLEC DSL, (Line Splitting) using ILEC Splitter

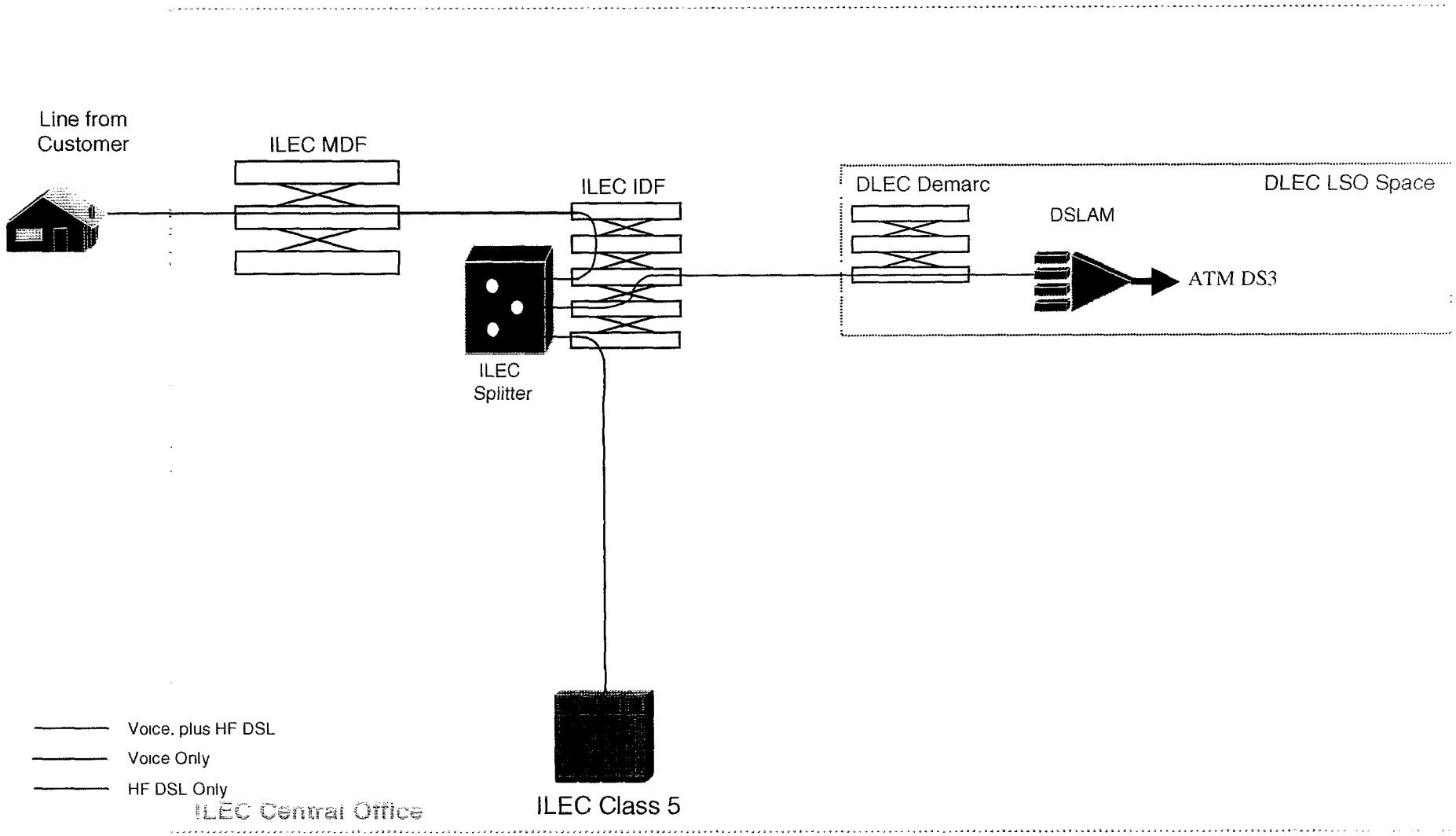

CLEC "UNE-P" Voice with DLEC DSL, (Line Splitting) using DLEC Splitter

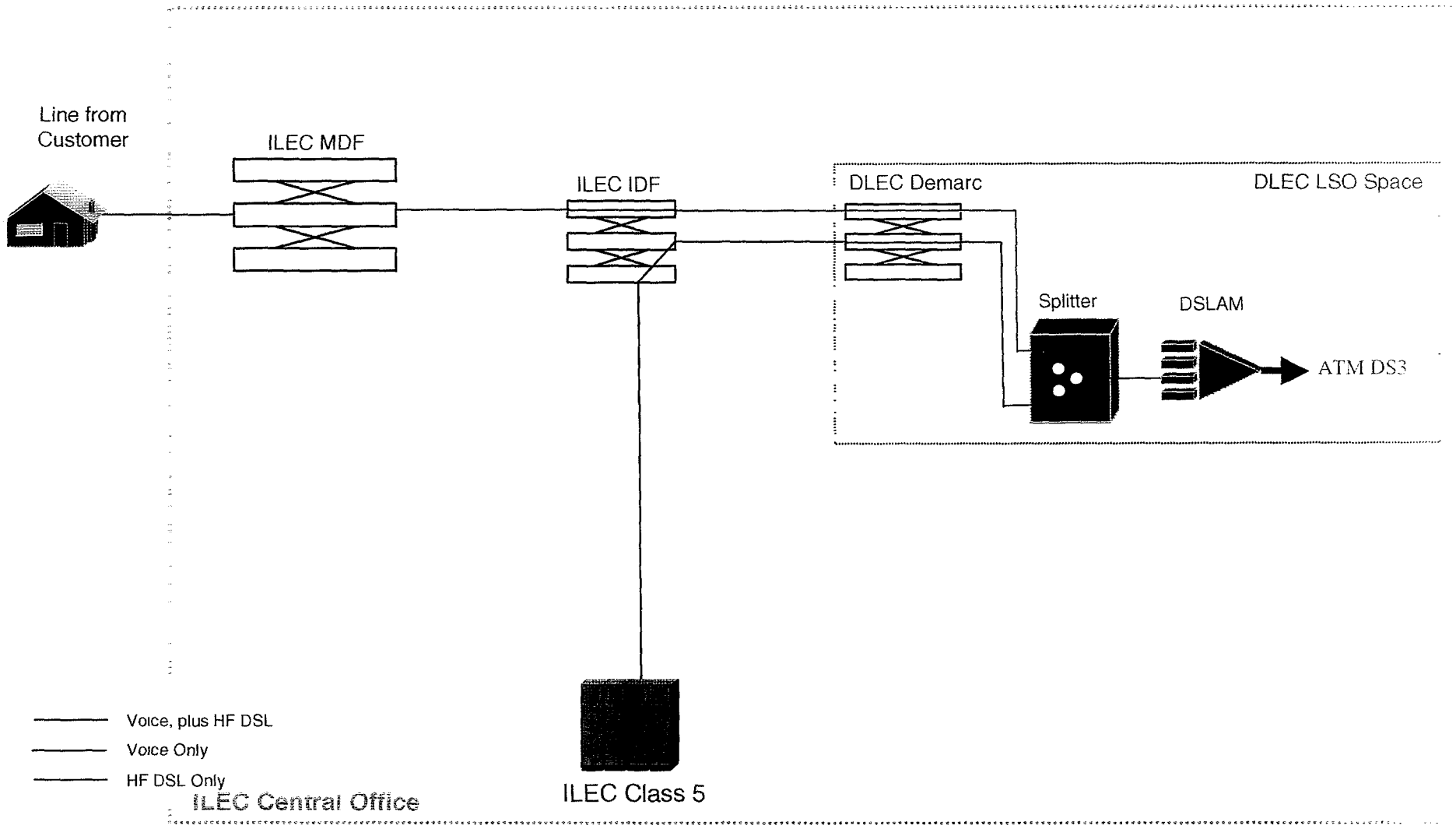

CLEC UNE-L Voice with DLEC DSL, (Loop Splitting) Using Pre-Wired "Cage-to-Cage" Dedicated Cables

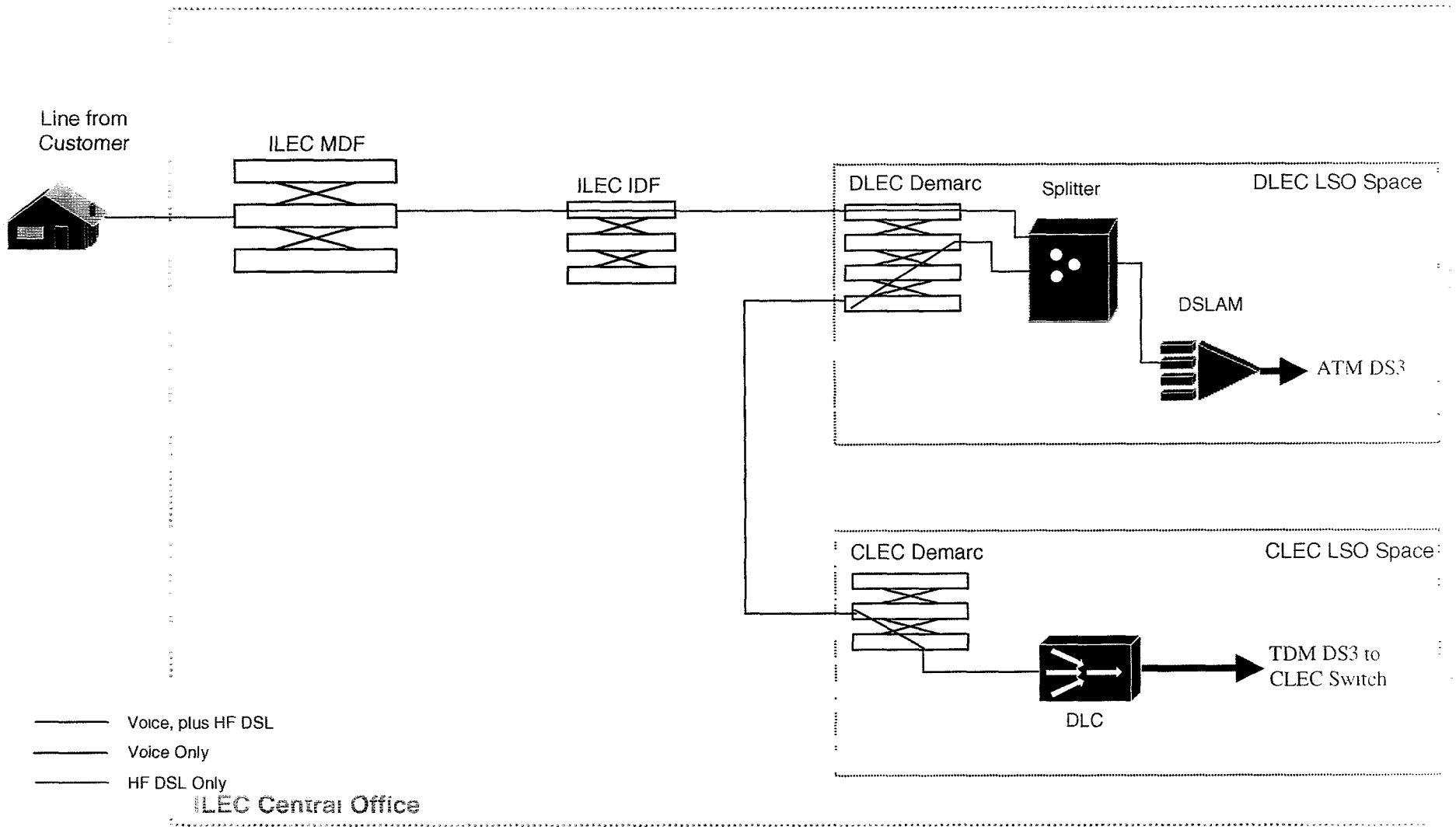

Docket 29054-Phase II
Testimony of Mark Van De Water
January 20, 2004
Exhibit: MDV-18

CLEC UNE-L Voice with DLEC DSL, (Loop Splitting) Using DLEC Splitters and Multiple Partners

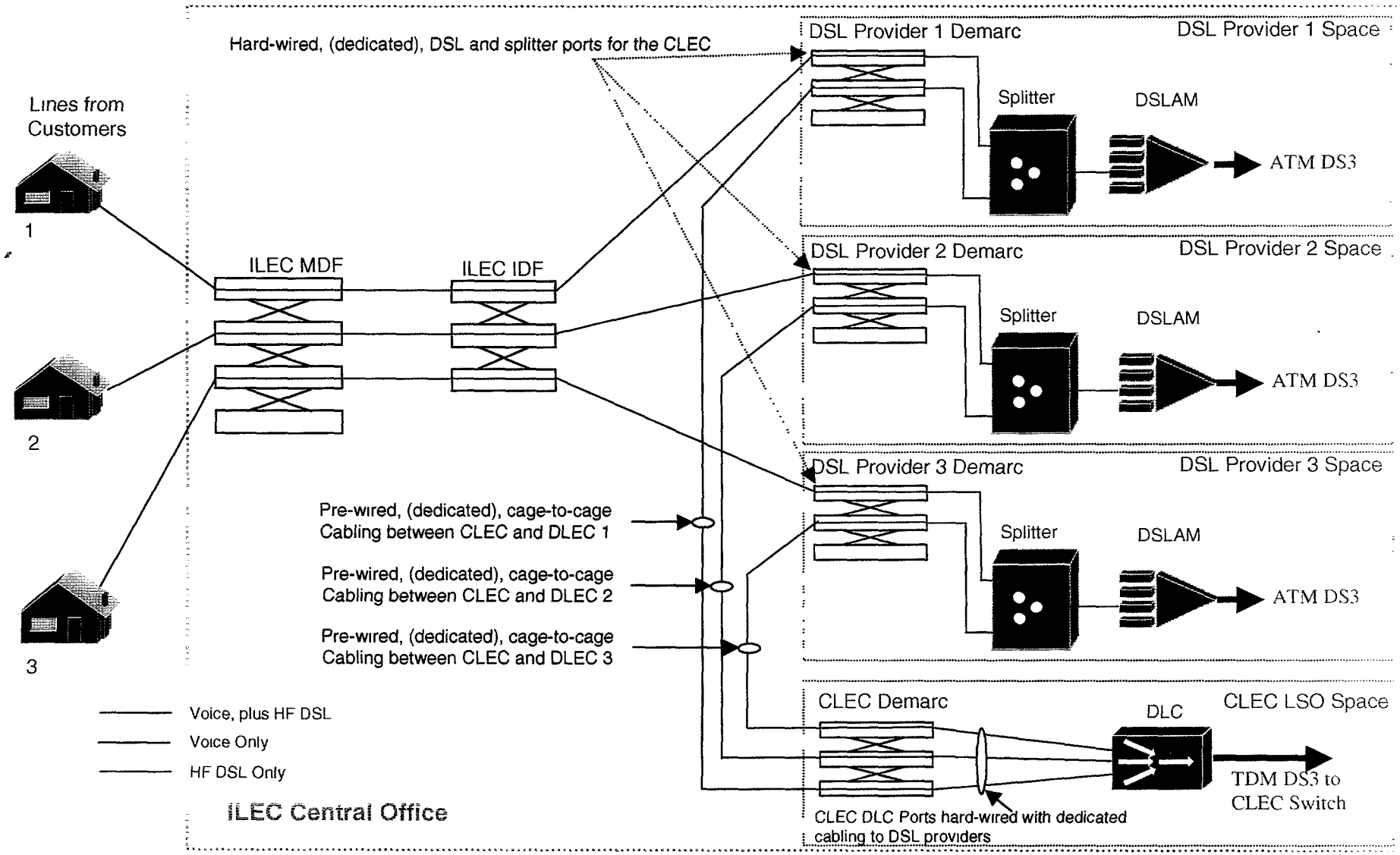

Docket 29054-Phase II
Testimony of Mark Van De Water
January 20, 2004
Exhibit: MDV-19

BELLSOUTH

BellSouth Interconnection Services
600 North 19th Street
8th Floor
Birmingham, Alabama

James M. Schenk
Sales AVP
205-321-4700
Fax 205-321-4757

July 21, 2003

Ms. Denise Berger
AT&T Operations – Assistant Vice President
1200 Peachtree Street NE
Room 12256
Atlanta, GA 30309

Dear Denise:

This is a follow up to telephone conversations and e-mails between BellSouth and AT&T concerning AT&T's use of Secondary Access Customer Terminal Locations (ACTLs) to Collocation sites. The Secondary ACTL process AT&T is currently utilizing requires manual processing in order for the service order(s) to flow through BellSouth's systems. The Federal Communications Commission (FCC) has issued a mandate that requires BellSouth to utilize an automated ordering process. For this reason, BellSouth has no plans to continue accepting service orders that require manual processing. AT&T has indicated there are nine (9) "FIM" Access Customer Name Abbreviation (ACNA) sites and an additional 15 "ATX" ACNA sites where a Secondary ACTL arrangement is needed.

BellSouth has previously recommended the following options to accommodate AT&T service orders while simultaneously meeting the mandated automated service order standards:

- **Use of a Single ACTL/ACNA at each Collocation Site**

  The specific root cause of this problem is AT&T's service requests that contain an ACNA in conflict with the ACNA of the collocation arrangement identified on the service order. AT&T should be aware that industry standards established by the National Exchange Carrier Association (NECA) and Telcordia subscribe to the premise of utilizing all codes consistently. Thus the option shown below :

  Use the "Transfer of Ownership" process to convert sites to one ACNA. This option eliminates the need to process orders for more than one ACNA at each site.

- **Accept the New Business Request (NBR) Option offered to convert BellSouth Databases to allow "Dual" ACNA Orders to flow through the BellSouth systems**

  In 2001, BellSouth worked with AT&T to develop a NBR for mechanization. This mechanization upgrade (involving 86 systems) would allow multiple ACNA orders to flow through BellSouth's systems without manual intervention.

Unfortunately, AT&T has rejected both of these options while requesting that BellSouth continue to manually process these service orders. Due to the FCC mandate and because of the costs of manually processing a service order, AT&T's request is unacceptable to BellSouth. In an effort to resolve this issue, BellSouth has continued to research additional options that would provide an "Order Flow Through".

The following proposal is an arrangement contained in the AT&T Interconnection Agreement that meets industry standards and allows valid service orders to flow through without manual intervention. BellSouth recommends the existing Secondary ACTL sites, additional 9 FIM sites, and 15 ATX sites use the following option to accomplish the Secondary ACTL requirement:

- **Use the 'Guest/Host' Collocation Arrangement to Establish a Guest Presence**

  Under this Collocation arrangement, each Host/Guest ACNA has unique ACTL and Connecting Facility Assignments (CFA) in the cage. The Host places a Collocation Augment Application, pursuant to its Interconnection Agreement, and submits a Letter of Authorization for the new entity (Guest). With the Guest/Host arrangement, a 30-day freeze would not be required provided applications are placed for new CFA facilities. The freeze would apply if existing CFAs were converted to a new ACNA. In addition, service order charges would apply to any services terminating in the collocation site involved in the change.

  Estimated costs to convert or add CFAs were previously provided for the ATX FTLDFLCY Collocation Site. (See Attachment.) The Guest/Host arrangement would allow orders to flow through without manual intervention since each ACNA would have a CFA and ACTL assigned in the collocation cage.

Please refer to AT&T's Interconnection Agreement or contact your Regional Collocation Manager for additional information about the Guest/Host Collocation Arrangement.

AT&T has indicated it was taking steps to resolve the need for multiple ACNA orders. Please advise BellSouth of the option AT&T prefers, thus eliminating the need for manual intervention on future service orders.

Should additional information be needed, please feel free to contact me at 205 321-4700.

Yours Truly,

ORIGINAL SIGNED BY JIM SCHENK

Attachment

Esitmate of charges to add Guest facilities (Florida Contract)							
Type Charge per contract	USOC	Description	Quantity	Charge per Unit	Total for item		
Subsequent Application Fee	PE1CA	NRC	1	$2,236.00	$2,236.00		
Cable Records fee per request	PE1CR	NRC	1	$980.22	$980.22		
VGDS0 per application	PE1CD	NRC	1	$656.50	$656.50		
VGDS0 per 100 pair	PE1C0	NRC	3425	$9.66 per 100 pair	$330.86		
DS1 PER T1TIE	PE1C1	NRC	280	4.52 per T1TIE	$1,265.60		
DS3 per T3TIE	PE1C3	NRC	48	15.82	$759.36		
Total estimate of augment w/cable records					$6,228.54		

BELLSOUTH

BellSouth Telecommunications, Inc.
600 North 19th Street
8th Floor
Birmingham, AL 35203

James.M.Schenk@bridge.bellsouth.com

James M. Schenk
Sales AVP

205 321 4700
Fax 205 321 4757
Toll Free 877 645 9533
Pager 877 320 2803

June 20, 2002

Ms. Denise Berger
AT&T
Room 12256
1200 Peachtree St. NE
Atlanta, GA 30309

Dear Denise:

This is a follow up to our May 15, 2002 lunch discussion, as well as a follow-up to Jim Schenk's May 29, 2002 interim letter to your May 17, 2002 letter, concerning AT&T's use of multiple company codes. Following is BellSouth's response to each question:

1. Types of AT&T orders presently falling out for manual processing

Service requests from AT&T that are affected by the multiple Access Customer Name Abbreviation (ACNA) problem are those orders placed by one AT&T/ACNA entity designating assignment to collocation arrangements with dissimilar ACNA information. This applies to all service requests that involve collocation when the ACNA of the ordering company does not match the ACNA of the collocation arrangement. In many locations, AT&T established its collocation arrangements with the ACNA "ATX", for AT&T, but places service requests to those collocation sites using the ACNA "TPM", for Teleport Communications Group. A list of these specific collocation sites is attached.

2. Define code causing BellSouth the problem

As stated above, the specific root cause of this problem is AT&T's service requests containing an ACNA that is in conflict with the ACNA of the collocation arrangement identified on the service request. AT&T should be aware that industry standards set by National Exchange Carrier Association (NECA) and Telcordia prescribe that all codes should be used consistently.

3. Causes for orders to "fall out" for manual handling

When a CLEC orders collocation space from BellSouth, the collocation "address" is established using the ACNA of the ordering CLEC, which is built into the cable identification (ID). It is BellSouth's policy not to accept assignments from CLECs other than the owner of the collocation space and associated cable assignments. Therefore, BellSouth's ordering and provisioning systems contains edits to prevent unauthorized assignment of its customers' collocation assets. As stated above, the service requests in question are issued by AT&T with ACNAs that do not match the ACNA of the collocation arrangement designated on the service

request and, as a result, appear as though AT&T is making assignments to a different CLEC's collocation space. BellSouth must take several "out-of-process" steps to accommodate AT&T's conflicting assignments, which have come about due to AT&T establishing collocation arrangements with BellSouth initially using the ACNA of "ATX" and then places service requests to those collocation spaces using an ACNA of "TPM."

In the past, at AT&T's request, BellSouth created duplicate, additional collocation Access Customer Terminal Location (ACTL) Common Language Location Identification (CLLI) codes. This additional step has allowed BellSouth's service centers to process AT&T's Local Service Requests (LSR) without clarification. However, when the facility assignment on AT&T's service request does not match BellSouth's facility records of the collocation arrangements, additional facility assignment edits disrupt the order flow, requiring investigation of the mismatch, follow-up with the service center, and manual intervention to resolve the service order/records conflict.

4. **Additional steps taken by BellSouth to process the orders**

In addition to the steps required to create the supplemental ACTL CLLI code, as stated above, facility assignment errors must be investigated, reviewed with the service center and manually overridden before the order can be completed.

5. **Date BellSouth realized the necessity to manually process and work around these specific types of orders**

BellSouth has known from the outset that AT&T's request to make collocation facility assignments using conflicting ACNA information was outside of the process and required additional manual intervention to create the additional collocation ACTL CLLI codes and to resolve the downstream errors created by the conflicting information provided by AT&T.

6. **Implementation of the "firewall" that prevents one company from using another's facilities or assets?**

These edits have been in place by BellSouth since divestiture.

7. **Number of orders falling out for manual handling each month due to the use of multiple company codes**

AT&T has provided BellSouth a forecast of approximately 400 Unbundled Network Element (UNE) Loop orders per month for the next 6 months. Any of these orders placed with the ACNA "TPM" to collocation sites ordered with ACNA "ATX" are outside of the process and will require manual handling to complete, as would any interconnection trunk requests using the "ATX/TPM" ACNA combination.

8. **Action planned by BellSouth as of June 15, 2002**

As BellSouth advised AT&T on May 29, 2002, due to AT&T's expressed interest in pursuing the use of a single ACNA, BellSouth has elected to make no changes at this time on the existing collocation arrangements where duplicate collocation ACTL CLLI codes have been established. Please refer to the attached list of collocation sites for which supplemental ACTL CLLI codes were established.

9. Embedded base of customers/orders/facilities

The embedded base of circuits would require a Transfer of Ownership to convert the ACNA to match the collocation ACNA. BellSouth's Professional Services team has procedures in place to manage the associated order activity.

10. Alternative solution

Currently, AT&T is negotiating with its BellSouth Collocation Account Team regarding the development of collocation inventories that will provide AT&T circuit details, including the circuit number and/or telephone number. BellSouth anticipates that the detail supplied would provide AT&T with more than enough information to identify the assets of each of AT&T's entities.

I hope the above information supports AT&T's understanding of the current out-of-process situation and its affects on AT&T's service order flow. Regarding your request for a meeting with all of BellSouth's Subject Matter Experts (SME) on this subject, I believe that you and Jan Flint agreed on June 11, 2002, that pending further investigation by BellSouth on a long-term solution to this issue, a meeting would not be productive at this time. If I can be of additional help, please let me know.

Sincerely,

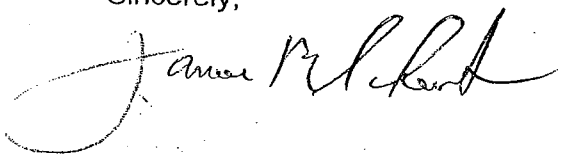

Attachment

BellSouth Region
Number of UNE-P Lines, UNE-L Loops, and
Collocators by CLLI Code

No.	CLLI Code	State	UNE-P	UNE-L	No. of Collocated CLECs
1	ALBSALMA	AL	2,971	0	5
2	ALCYALMT	AL	1,393	0	0
3	ALVLALMA	AL	1,343	0	1
4	ANTNALLE	AL	636	0	1
5	ANTNALMT	AL	2,890	0	3
6	ANTNALOX	AL	2,002	0	1
7	ATHNALER	AL	79	0	0
8	ATHNALMA	AL	2,357	0	3
9	ATTLALNM	AL	601	0	0
10	AUBNALMA	AL	2,910	0	2
11	BLFNALMA	AL	179	0	0
12	BOAZALMA	AL	860	0	0
13	BRHMALCH	AL	1,406	0	11
14	BRHMALCP	AL	2,558	0	6
15	BRHMALEL	AL	1,675	0	6
16	BRHMALEN	AL	2,400	0	5
17	BRHMALEW	AL	1,078	0	5
18	BRHMALFO	AL	997	0	1
19	BRHMALFS	AL	735	0	9
20	BRHMALHW	AL	2,138	0	14
21	BRHMALMT	AL	4,303	0	18
22	BRHMALOM	AL	1,938	0	6
23	BRHMALOX	AL	1,676	0	11
24	BRHMALRC	AL	2,594	0	11
25	BRHMALTA	AL	1,243	0	3
26	BRHMALVA	AL	2,720	0	10
27	BRHMALWE	AL	1,813	0	3
28	BRHMALWL	AL	1,617	0	
29	BRPTALMA	AL	143	0	0
30	BRTOALMA	AL	996	0	0
31	BSMRALBP	AL	23	0	0
32	BSMRALBU	AL	172	0	0
33	BSMRALHT	AL	1,329	0	1
34	BSMRALMA	AL	3,374	0	8
35	BYMNALMA	AL	730	0	0
36	CALRALMA	AL	413	0	0
37	CHBGALMA	AL	410	0	0
38	CHLSALMA	AL	187	0	0
39	CLANALMA	AL	498	0	0
40	CLMBALMA	AL	406	0	0
41	CLMNALFA	AL	278	0	0
42	CLMNALJC	AL	161	0	0
43	CLMNALMA	AL	3,138	0	2
44	CNVIALMA	AL	157	0	0
45	CRDVALMA	AL	199	0	0
46	CRHLALNM	AL	30	0	0
47	CRLDALMA	AL	91	0	0

BellSouth Region
Number of UNE-P Lines, UNE-L Loops, and
Collocators by CLLI Code

48	CTRNALNM	AL	156	0	0
49	CYTNALMA	AL	84	0	0
50	DCTRALMT	AL	5,516	0	4
51	DDVLALMA	AL	319	0	0
52	DMPLALMA	AL	721	0	0
53	DORAALMA	AL	563	0	0
54	EUFLALMA	AL	1,141	0	0
55	EUTWALBO	AL	17	0	0
56	EUTWALMA	AL	175	0	0
57	EVRGALMA	AL	232	0	0
58	FLRNALMA	AL	3,794	0	2
59	FMTNALMT	AL	183	0	0
60	FRHPALMA	AL	1,589	0	1
61	FTDPALMA	AL	40	0	0
62	FTPYALMA	AL	1,021	0	0
63	GDSDALHS	AL	867	0	0
64	GDSDALMT	AL	2,539	0	3
65	GDSDALRD	AL	672	0	0
66	GDWRALMA	AL	59	0	0
67	GNBOALMA	AL	260	0	0
68	GRDLALNM	AL	869	0	2
69	GRLYALMA	AL	134	0	0
70	GTVLALNM	AL	900	0	0
71	GYVLALNM	AL	353	0	0
72	HLVIALMA	AL	72	0	0
73	HNVIALLW	AL	3,103	0	5
74	HNVIALMT	AL	3,443	0	11
75	HNVIALPW	AL	2,876	0	7
76	HNVIALRW	AL	176	0	1
77	HNVIALUN	AL	2,435	0	8
78	HNVLALBR	AL	63	0	0
79	HNVLALNM	AL	154	0	0
80	HRBOALOM	AL	60	0	0
81	HRTSALNM	AL	1,041	0	0
82	HRTSALPE	AL	99	0	0
83	HZGRALMA	AL	776	0	0
84	JCSNALNM	AL	678	0	0
85	JCVLALMA	AL	741	0	1
86	JSPRALMT	AL	1,375	0	0
87	KLLNALMA	AL	324	0	0
88	LFYTALRS	AL	131	0	0
89	LGTNALMA	AL	131	0	0
90	LNDNALMA	AL	114	0	0
91	LVTNALLA	AL	231	0	0
92	LXTNALMA	AL	54	0	0
93	MARNALNM	AL	102	0	0
94	MCINALMA	AL	37	0	0
95	MDSNALOM	AL	1,246	0	0
96	MNFDALMA	AL	101	0	0
97	MNTVALNM	AL	349	0	0

BellSouth Region
Number of UNE-P Lines, UNE-L Loops, and
Collocators by CLLI Code

98	MOBLALAP	AL	2,407	0	5
99	MOBLALAZ	AL	2,464	0	17
100	MOBLALBF	AL	299	0	0
101	MOBLALOS	AL	5,569	0	12
102	MOBLALPR	AL	2,845	0	5
103	MOBLALSA	AL	1,315	0	2
104	MOBLALSE	AL	1,024	0	0
105	MOBLALSF	AL	2,314	0	3
106	MOBLALSH	AL	4,411	0	10
107	MOBLALSK	AL	3,631	0	8
108	MOBLALTH	AL	1,235	0	0
109	MOLTALNM	AL	427	0	0
110	MPVLALMA	AL	34	0	0
111	MTGMALDA	AL	5,405	0	12
112	MTGMALMB	AL	693	0	0
113	MTGMALMT	AL	3,803	0	13
114	MTGMALNO	AL	3,387	0	9
115	MTVRALMA	AL	106	0	0
116	OHTCALMA	AL	125	0	0
117	OPLKALMT	AL	2,197	0	2
118	PDMTALMA	AL	282	0	0
119	PHCYALFM	AL	111	0	0
120	PHCYALMA	AL	3,380	0	2
121	PNSNALMA	AL	799	0	0
122	PRSHALNM	AL	48	0	0
123	PRVLALMA	AL	1,318	0	1
124	RDBAALMA	AL	145	0	0
125	RLVLALMA	AL	500	0	0
126	RRVLALMA	AL	229	0	0
127	SELMALMT	AL	2,115	0	1
128	SHFDALMT	AL	2,579	0	3
129	STSNALMA	AL	99	0	0
130	SYLCALMT	AL	1,281	0	0
131	THVLALMA	AL	431	0	0
132	TLDGALMA	AL	1,194	0	0
133	TLDGALRF	AL	68	0	0
134	TROYALMA	AL	893	0	0
135	TSCLALDH	AL	2,747	0	3
136	TSCLALMT	AL	5,455	0	7
137	TSCLALNO	AL	758	0	0
138	TSKGALMA	AL	495	0	0
139	TWCKALMA	AL	117	0	0
140	UNTWALNM	AL	51	0	0
141	VNCNALMA	AL	115	0	0
142	WBTNALNM	AL	152	0	0
143	WRRRALNM	AL	644	0	0
144	WTMPALMA	AL	1,097	0	0
145	YORKALMA	AL	142	0	0
146	ARCHFLMA	FL	66	1	0
147	BCRTFLBT	FL	2,282	1,969	19